MODEL T1242

30-TON HYDRAULIC SHOP PRESS

OWNER'S MANUAL

(For models manufactured since 4/18)

#JHABTK19310 PRINTED IN CHINA V1.07.18

⚠ WARNING!

This manual provides critical safety instructions on the proper setup, operation, maintenance, and service of this machine/tool. Save this document, refer to it often, and use it to instruct other operators.

Failure to read, understand and follow the instructions in this manual may result in fire or serious personal injury—including amputation, electrocution, or death.

The owner of this machine/tool is solely responsible for its safe use. This responsibility includes but is not limited to proper installation in a safe environment, personnel training and usage authorization, proper inspection and maintenance, manual availability and comprehension, application of safety devices, cutting/sanding/grinding tool integrity, and the usage of personal protective equipment.

The manufacturer will not be held liable for injury or property damage from negligence, improper training, machine modifications or misuse.

⚠ WARNING!

Some dust created by power sanding, sawing, grinding, drilling, and other construction activities contains chemicals known to the State of California to cause cancer, birth defects or other reproductive harm. Some examples of these chemicals are:

- **Lead from lead-based paints.**
- **Crystalline silica from bricks, cement and other masonry products.**
- **Arsenic and chromium from chemically-treated lumber.**

Your risk from these exposures varies, depending on how often you do this type of work. To reduce your exposure to these chemicals: Work in a well ventilated area, and work with approved safety equipment, such as those dust masks that are specially designed to filter out microscopic particles.

Table of Contents

INTRODUCTION

Contact Info

We stand behind our machines! If you have questions or need help, contact us with the information below. Before contacting, make sure you get the **serial number** and **manufacture date** from the machine ID label. This will help us help you faster.

Grizzly Technical Support
1815 W. Battlefield
Springfield, MO 65807
Phone: (570) 546-9663
Email: techsupport@grizzly.com

We want your feedback on this manual. What did you like about it? Where could it be improved? Please take a few minutes to give us feedback.

Grizzly Documentation Manager
P.O. Box 2069
Bellingham, WA 98227-2069
Email: manuals@grizzly.com

⚠WARNING

Like all machinery there is potential danger when operating this machine. Accidents are frequently caused by lack of familiarity or failure to pay attention. Use this machine with respect and caution to lessen the possibility of operator injury. If normal safety precautions are overlooked or ignored, serious personal injury may occur.

Manual Accuracy

We are proud to provide a high-quality owner's manual with your new machine!

We made every effort to be exact with the instructions, specifications, drawings, and photographs in this manual. Sometimes we make mistakes, but our policy of continuous improvement also means that **sometimes the machine you receive is slightly different than shown in the manual**.

If you find this to be the case, and the difference between the manual and machine leaves you confused or unsure about something, check our website for an updated version. We post current manuals and manual updates for free on our website at **www.grizzly.com**.

Alternatively, you can call our Technical Support for help. Before calling, make sure you write down the **Manufacture Date** and **Serial Number** from the machine ID label (see below). This information is required for us to provide proper tech support, and it helps us determine if updated documentation is available for your machine.

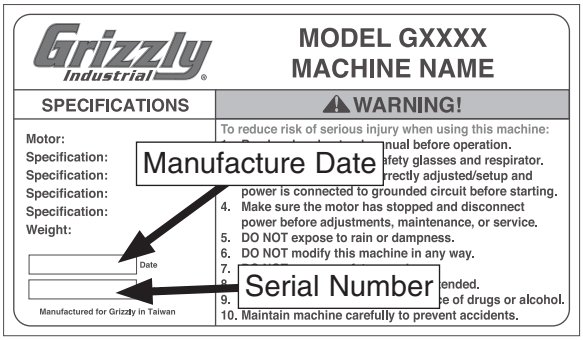

Controls & Components

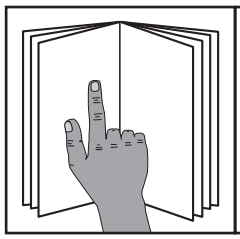

⚠WARNING

To reduce your risk of serious injury, read this entire manual BEFORE using machine.

Refer to the following figures and descriptions to become familiar with the basic controls and components of this machine. Understanding these items and how they work will help you understand the rest of the manual and minimize your risk of injury when operating this machine.

Controls & Components Overview

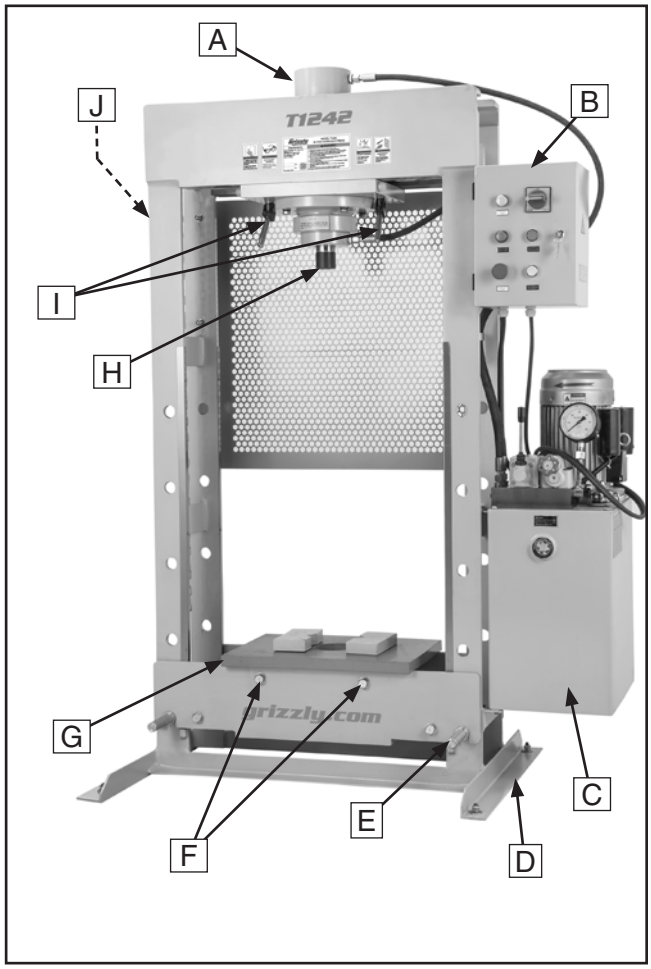

Figure 1. Press controls and components.

A. Ram Cylinder. Houses hydraulic ram. Can be positioned left/right along length of cross beam.

B. Control Panel. Houses buttons/switches used for machine operation (see **Page 4** for detailed descriptions). Features key lock. Key must be removed and stored separately to restrict access to live electrical parts inside.

C. Hydraulic Fluid Tank. Holds 13 gallons of hydraulic fluid for operation of hydraulic ram.

D. Frame. Used to support machine components and adjust height of press bed.

E. Support Rods. Insert into frame column holes to support press bed.

F. Press Blocks. Provides offset/raised workpiece support for certain types of pressing operations.

G. Press Bed. Holds workpiece for pressing operations. Bed raises and lowers using hydraulic lever (see **Page 4** for detailed descriptions).

H. Hydraulic Ram. Applies pressure against workpiece.

I. Ram Cylinder Locks. Secure ram into position along length of cross beam.

J. Lifting Chain. Raises or lowers press bed.

Control Panel

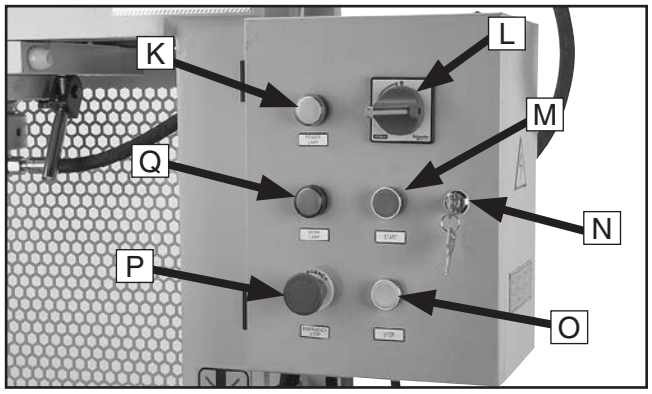

Figure 2. Control panel components.

K. Power Lamp. Illuminates when master power switch is turned on (to "I" position).

L. Master Power Switch. Toggles incoming power ON or OFF. Vertical position toggles incoming power ON. Horizontal position (see **Figure 2**) toggles incoming power OFF.

M. START Button. Starts hydraulic pump motor, which provides hydraulic fluid to ram cylinder.

N. Control Panel Lock w/Key. Key should be removed and stored to restrict access to live electrical parts.

O. STOP Button. Stops hydraulic pump motor flow of hydraulic fluid to ram cylinder.

P. EMERGENCY STOP Button. Immediately stops machine operation and prevents restarting until reset. Twist clockwise to reset.

Q. WORK LAMP. Illuminates when START button is pressed.

Hydraulic Controls

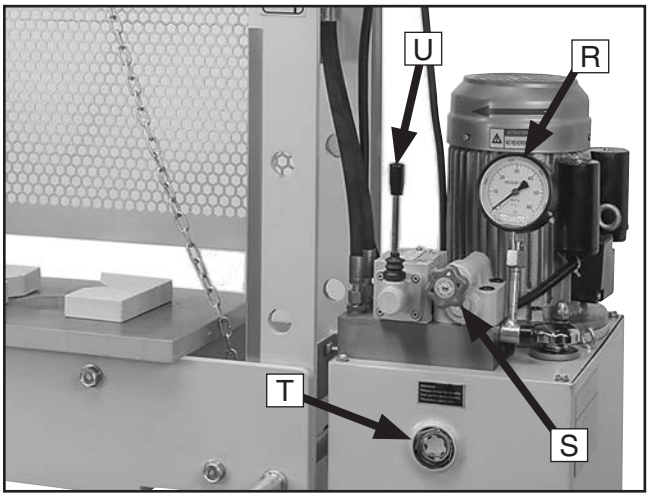

Figure 3. Hydraulic controls.

R. Pressure Gauge. Displays amount of pressure (in tons) being applied to workpiece.

S. Pressure Adjustment Valve. Adjusts amount of force being applied to workpiece.

T. Tank Sight Glass. Indicates proper fluid level in hydraulic tank.

U. Ram Control Lever. Lever has three positions: UP raises the ram; DOWN lowers the ram; MIDDLE leaves the ram at rest in its current position.

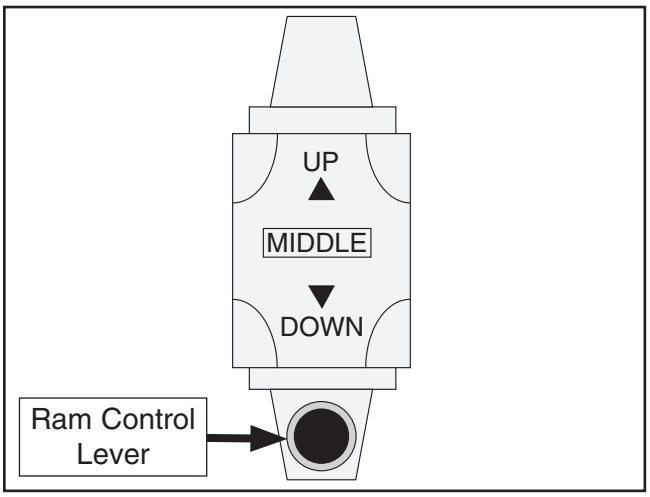

Figure 4. Ram control lever as seen from above.

MACHINE DATA SHEET

Customer Service #: (570) 546-9663 · To Order Call: (800) 523-4777 · Fax #: (800) 438-5901

MODEL T1242
30-TON HYDRAULIC SHOP PRESS

Product Dimensions:

Weight	1,050 lbs.
Width (side-to-side) x Depth (front-to-back) x Height	50 x 27 x 72 in.
Footprint (Length/Width)	40 x 27 in.

Shipping Dimensions:

Type	Wood Crate
Content	Machine
Weight	1,232 lbs.
Length x Width x Height	56 x 31 x 78 in.
Must Ship Upright	Yes

Electrical:

Required Requirement	220V, Single-Phase, 60 Hz
Full-Load Current Rating	13.5A
Minimum Circuit Size	20A
Connection Type	Cord & Plug
Power Cord Included	Yes
Power Cord Length	6 ft.
Power Cord Gauge	14 AWG
Plug Included	Yes
Included Plug Type	NEMA 6-20
Switch Type	Rotary ON/OFF Switch w/Padlock Safety

Motor:

Main

Type	TEFC Capacitor-Start Induction
Horsepower	3 HP
Voltage	220V
Phase	Single-Phase
Amps	13.5A
Speed	1740 RPM
Cycle	60 Hz
Power Transfer	Hydraulic
Bearings	Sealed & Permanently Lubricated

Main Specifications:

Operation Information

Ram Maximum Applied Pressure	60,000 lbs. (30 Tons)
Ram Maximum Stroke	10 in.
Gauge Convention	Metric Tons & U.S. Tons
Ram Diameter	2 in.
Maximum Distance to Table	36-1/2 in.
Minimum Distance to Table	7-3/4 in.
Bed Support Pin Diameter	1-1/4 in.
Number of Bed Adjustment Holes	5
Bed Adjustment Hole Spacing	8 in.
Hydraulic Fluid Type	ISO 46 Hydraulic Oil
Hydraulic Fluid Capacity	13 Gal.

Construction

Frame	Steel
Base	Steel
Table Plates	Steel
Paint Type/Finish	Enamel

Other Specifications:

Country of Origin	China
Warranty	1 Year
Approximate Assembly & Setup Time	30 min.
Serial Number Location	ID Label
ISO 9001 Factory	Yes

Features:

Motor-Driven Hydraulic Operation
Built-in Pressure Gauge
Welded Steel Frame for Maximum Rigidity
Sliding Head for Off-Center Workpieces
Includes 2 Steel Arbor Plates
Precision-Ground Cast-Iron Table
Five Table-Height Positions
Protective Rear Shielding

Accessories:

Press Blocks (2)
Lifting Chain (1)

SECTION 1: SAFETY

For Your Own Safety, Read Instruction Manual Before Operating This Machine

The purpose of safety symbols is to attract your attention to possible hazardous conditions. This manual uses a series of symbols and signal words intended to convey the level of importance of the safety messages. The progression of symbols is described below. Remember that safety messages by themselves do not eliminate danger and are not a substitute for proper accident prevention measures. Always use common sense and good judgment.

DANGER	**Indicates an imminently hazardous situation which, if not avoided, WILL result in death or serious injury.**
WARNING	**Indicates a potentially hazardous situation which, if not avoided, COULD result in death or serious injury.**
CAUTION	**Indicates a potentially hazardous situation which, if not avoided, MAY result in minor or moderate injury. It may also be used to alert against unsafe practices.**
NOTICE	**This symbol is used to alert the user to useful information about proper operation of the machine.**

Safety Instructions for Machinery

WARNING

OWNER'S MANUAL. Read and understand this owner's manual BEFORE using machine.

TRAINED OPERATORS ONLY. Untrained operators have a higher risk of being hurt or killed. Only allow trained/supervised people to use this machine. When machine is not being used, disconnect power, remove switch keys, or lock-out machine to prevent unauthorized use—especially around children. Make your workshop kid proof!

DANGEROUS ENVIRONMENTS. Do not use machinery in areas that are wet, cluttered, or have poor lighting. Operating machinery in these areas greatly increases the risk of accidents and injury.

MENTAL ALERTNESS REQUIRED. Full mental alertness is required for safe operation of machinery. Never operate under the influence of drugs or alcohol, when tired, or when distracted.

ELECTRICAL EQUIPMENT INJURY RISKS. You can be shocked, burned, or killed by touching live electrical components or improperly grounded machinery. To reduce this risk, only allow qualified service personnel to do electrical installation or repair work, and always disconnect power before accessing or exposing electrical equipment.

DISCONNECT POWER FIRST. Always disconnect machine from power supply BEFORE making adjustments, changing tooling, or servicing machine. This prevents an injury risk from unintended startup or contact with live electrical components.

EYE PROTECTION. Always wear ANSI-approved safety glasses or a face shield when operating or observing machinery to reduce the risk of eye injury or blindness from flying particles. Everyday eyeglasses are NOT approved safety glasses.

⚠WARNING

WEARING PROPER APPAREL. Do not wear clothing, apparel or jewelry that can become entangled in moving parts. Always tie back or cover long hair. Wear non-slip footwear to reduce risk of slipping and losing control or accidentally contacting cutting tool or moving parts.

HAZARDOUS DUST. Dust created by machinery operations may cause cancer, birth defects, or long-term respiratory damage. Be aware of dust hazards associated with each workpiece material. Always wear a NIOSH-approved respirator to reduce your risk.

HEARING PROTECTION. Always wear hearing protection when operating or observing loud machinery. Extended exposure to this noise without hearing protection can cause permanent hearing loss.

REMOVE ADJUSTING TOOLS. Tools left on machinery can become dangerous projectiles upon startup. Never leave chuck keys, wrenches, or any other tools on machine. Always verify removal before starting!

USE CORRECT TOOL FOR THE JOB. Only use this tool for its intended purpose—do not force it or an attachment to do a job for which it was not designed. Never make unapproved modifications—modifying tool or using it differently than intended may result in malfunction or mechanical failure that can lead to personal injury or death!

AWKWARD POSITIONS. Keep proper footing and balance at all times when operating machine. Do not overreach! Avoid awkward hand positions that make workpiece control difficult or increase the risk of accidental injury.

CHILDREN & BYSTANDERS. Keep children and bystanders at a safe distance from the work area. Stop using machine if they become a distraction.

GUARDS & COVERS. Guards and covers reduce accidental contact with moving parts or flying debris. Make sure they are properly installed, undamaged, and working correctly BEFORE operating machine.

FORCING MACHINERY. Do not force machine. It will do the job safer and better at the rate for which it was designed.

NEVER STAND ON MACHINE. Serious injury may occur if machine is tipped or if the cutting tool is unintentionally contacted.

STABLE MACHINE. Unexpected movement during operation greatly increases risk of injury or loss of control. Before starting, verify machine is stable and mobile base (if used) is locked.

USE RECOMMENDED ACCESSORIES. Consult this owner's manual or the manufacturer for recommended accessories. Using improper accessories will increase the risk of serious injury.

UNATTENDED OPERATION. To reduce the risk of accidental injury, turn machine ***OFF*** and ensure all moving parts completely stop before walking away. Never leave machine running while unattended.

MAINTAIN WITH CARE. Follow all maintenance instructions and lubrication schedules to keep machine in good working condition. A machine that is improperly maintained could malfunction, leading to serious personal injury or death.

DAMAGED PARTS. Regularly inspect machine for damaged, loose, or mis-adjusted parts—or any condition that could affect safe operation. Immediately repair/replace BEFORE operating machine. For your own safety, DO NOT operate machine with damaged parts!

MAINTAIN POWER CORDS. When disconnecting cord-connected machines from power, grab and pull the plug—NOT the cord. Pulling the cord may damage the wires inside. Do not handle cord/plug with wet hands. Avoid cord damage by keeping it away from heated surfaces, high traffic areas, harsh chemicals, and wet/damp locations.

EXPERIENCING DIFFICULTIES. If at any time you experience difficulties performing the intended operation, stop using the machine! Contact our Technical Support at (570) 546-9663.

Additional Safety for Hydraulic Press

⚠WARNING

Serious injury can occur from getting hands, fingers, etc. crushed by ram or workpieces. Death can result from getting accidentally injected by hydraulic fluid. Workpieces ejected by press can strike operator or bystanders. To minimize risk of injury, anyone operating this machine MUST completely heed hazards and warnings below.

HANDS AND FINGERS. Always keep hands and fingers away from ram during operations to avoid contact. If hands or fingers enter ram path during use, serious injury may occur.

CAPACITY. Never exceed pressure rating of hydraulic system. Doing so could result in machine failure, explosion of high pressure components, or bodily injury as a result of flying debris or sudden unexpected movement or breakage.

AVOIDING PROJECTILE INJURIES. Being hit by a launched workpiece or press tooling can cause severe impact injury or death. Stand out of the way of any possible projectile path. Never press with rods or pins that are long enough to shift off-center and kick out under a load. Never stack rods and spacers to create an extended press pin. If pressing must occur with an extended press pin, the pin must be fastened with a safety chain or the press pin must be enclosed in a safety cage to eliminate a projectile hazard.

WORKPIECE SUPPORT. When a part is pressed free, a workpiece may shift suddenly or fall from the press, causing a crushing injury to your foot or leg. Use a catch basket and support long or awkward workpieces with stands or chains, or have an assistant support the end of a long workpiece during pressing operations.

BED SUPPORT RODS. Always ensure bed support rods evenly support press bed. Failure to support press bed could lead to bed accidentally dropping during setup or operation, which may result in crushing injury.

FLUID INJECTION. Fluid pressures developed from this machine may be high enough to penetrate your skin and enter your bloodstream. Hydraulic fluid injected into your bloodstream is a medical emergency. If not treated immediately, this blood poisoning could result in an aggressive infection, amputation, or death. Keep body parts away from any high-pressure hydraulic leak.

WORKPIECE POSITION. Workpieces positioned off-center below hydraulic ram can be ejected unexpectedly, striking operator or bystanders with great force. Always ensure workpiece is positioned so force is evenly distributed. Immediately stop and retract ram if workpiece shifts during operation.

MAINTENANCE/SERVICE. Always disconnect machine from power supply, wait for all moving parts to come to a complete stop, and bleed off all hydraulic pressure before performing any inspections, adjustments, and maintenance.

⚠WARNING

Like all machinery there is potential danger when operating this machine. Accidents are frequently caused by lack of familiarity or failure to pay attention. Use this machine with respect and caution to decrease the risk of operator injury. If normal safety precautions are overlooked or ignored, serious personal injury may occur.

⚠CAUTION

No list of safety guidelines can be complete. Every shop environment is different. Always consider safety first, as it applies to your individual working conditions. Use this and other machinery with caution and respect. Failure to do so could result in serious personal injury, damage to equipment, or poor work results.

SECTION 2: POWER SUPPLY

Availability

Before installing the machine, consider the availability and proximity of the required power supply circuit. If an existing circuit does not meet the requirements for this machine, a new circuit must be installed. To minimize the risk of electrocution, fire, or equipment damage, installation work and electrical wiring must be done by an electrician or qualified service personnel in accordance with all applicable codes and standards.

WARNING

Electrocution, fire, shock, or equipment damage may occur if machine is not properly grounded and connected to power supply.

Full-Load Current Rating

The full-load current rating is the amperage a machine draws at 100% of the rated output power. On machines with multiple motors, this is the amperage drawn by the largest motor or sum of all motors and electrical devices that might operate at one time during normal operations.

Full-Load Current Rating at 220V .. 13.5 Amps

The full-load current is not the maximum amount of amps that the machine will draw. If the machine is overloaded, it will draw additional amps beyond the full-load rating.

If the machine is overloaded for a sufficient length of time, damage, overheating, or fire may result—especially if connected to an undersized circuit. To reduce the risk of these hazards, avoid overloading the machine during operation and make sure it is connected to a power supply circuit that meets the specified circuit requirements.

Circuit Information

A power supply circuit includes all electrical equipment between the breaker box or fuse panel in the building and the machine. The power supply circuit used for this machine must be sized to safely handle the full-load current drawn from the machine for an extended period of time. (If this machine is connected to a circuit protected by fuses, use a time delay fuse marked D.)

CAUTION

For your own safety and protection of property, consult an electrician if you are unsure about wiring practices or electrical codes in your area.

Note: *Circuit requirements in this manual apply to a dedicated circuit—where only one machine will be running on the circuit at a time. If machine will be connected to a shared circuit where multiple machines may be running at the same time, consult an electrician or qualified service personnel to ensure circuit is properly sized for safe operation.*

Circuit Requirements

This machine is prewired to operate on a power supply circuit that has a verified ground and meets the following requirements:

Nominal Voltage 208V, 220V, 230V, 240V
Cycle ..... 60 Hz
Phase ..... Single-Phase
Power Supply Circuit ..... 20 Amps
Plug/Receptacle ..... NEMA 6-20

Grounding Requirements

This machine MUST be grounded. In the event of certain malfunctions or breakdowns, grounding reduces the risk of electric shock by providing a path of least resistance for electric current.

This machine is equipped with a power cord that has an equipment-grounding wire and a grounding plug. Only insert plug into a matching receptacle (outlet) that is properly installed and grounded in accordance with all local codes and ordinances. DO NOT modify the provided plug!

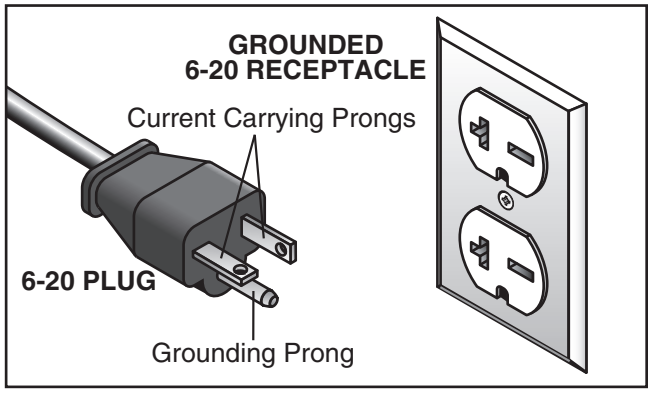

Figure 5. Typical 6-20 plug and receptacle.

⚠CAUTION

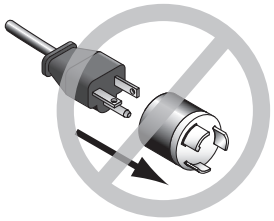

No adapter should be used with plug. If plug does not fit available receptacle, or if machine must be reconnected for use on a different type of circuit, reconnection must be performed by an electrician or qualified service personnel, and it must comply with all local codes and ordinances.

⚠WARNING

Serious injury could occur if you connect machine to power before completing setup process. DO NOT connect to power until instructed later in this manual.

Improper connection of the equipment-grounding wire can result in a risk of electric shock. The wire with green insulation (with or without yellow stripes) is the equipment-grounding wire. If repair or replacement of the power cord or plug is necessary, do not connect the equipment-grounding wire to a live (current carrying) terminal.

Check with a qualified electrician or service personnel if you do not understand these grounding requirements, or if you are in doubt about whether the tool is properly grounded. If you ever notice that a cord or plug is damaged or worn, disconnect it from power, and immediately replace it with a new one.

Extension Cords

We do not recommend using an extension cord with this machine. If you must use an extension cord, only use it if absolutely necessary and only on a temporary basis.

Extension cords cause voltage drop, which can damage electrical components and shorten motor life. Voltage drop increases as the extension cord size gets longer and the gauge size gets smaller (higher gauge numbers indicate smaller sizes).

Any extension cord used with this machine must be in good condition and contain a ground wire and matching plug/receptacle. Additionally, it must meet the following size requirements:

Minimum Gauge Size .....12 AWG
Maximum Length (Shorter is Better).....50 ft.

SECTION 3: SETUP

Unpacking

This machine was carefully packaged for safe transport. When unpacking, separate all enclosed items from packaging materials and inspect them for shipping damage. ***If items are damaged, please call us immediately at (570) 546-9663.***

IMPORTANT: Save all packaging materials until you are completely satisfied with the machine and have resolved any issues between Grizzly or the shipping agent. *You MUST have the original packaging to file a freight claim. It is also extremely helpful if you need to return your machine later.*

⚠WARNING

SUFFOCATION HAZARD!

Keep children and pets away from plastic bags or packing materials shipped with this machine. Discard immediately.

Needed for Setup

The following items are needed, but not included, for the setup/assembly of this machine.

Items Needed	Qty
• Additional People	1
• Safety Glasses (Per Person)	1
• Cleaner/Degreaser (**Page 13**)	As Needed
• Disposable Shop Rags	As Needed
• Forklift	1
• ISO-46 Hydraulic Fluid	13 Gal.
• Funnel	1

Inventory

The following is a list of items shipped with your machine. Before beginning setup, lay these items out and inventory them.

If any non-proprietary parts are missing (e.g. a nut or a washer), we will gladly replace them; or for the sake of expediency, replacements can be obtained at your local hardware store.

Box 1 (Figure 6)	Qty
A. Lifting Chain	1
B. Press Bed	1
C. Press Blocks	2

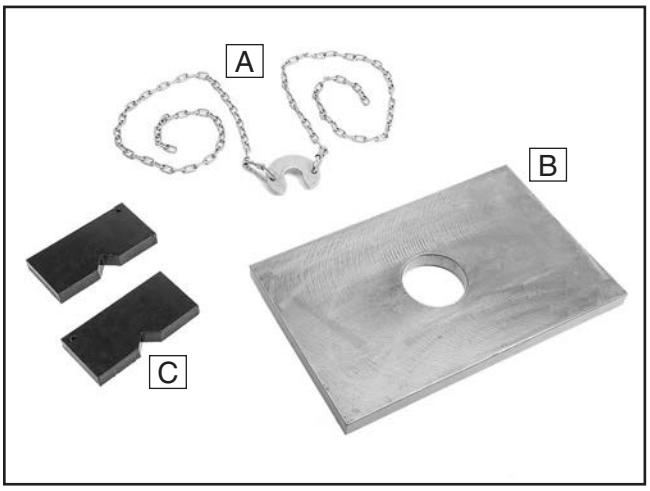

Figure 6. Inventory items.

NOTICE

If you cannot find an item on this list, carefully check around/inside the machine and packaging materials. Often, these items get lost in packaging materials while unpacking or they are pre-installed at the factory.

Cleanup

The unpainted surfaces of your machine are coated with a heavy-duty rust preventative that prevents corrosion during shipment and storage. This rust preventative works extremely well, but it will take a little time to clean.

Be patient and do a thorough job cleaning your machine. The time you spend doing this now will give you a better appreciation for the proper care of your machine's unpainted surfaces.

There are many ways to remove this rust preventative, but the following steps work well in a wide variety of situations. Always follow the manufacturer's instructions with any cleaning product you use and make sure you work in a well-ventilated area to minimize exposure to toxic fumes.

Before cleaning, gather the following:
- Disposable rags
- Cleaner/degreaser (WD•40 works well)
- Safety glasses & disposable gloves
- Plastic paint scraper (optional)

Basic steps for removing rust preventative:

1. Put on safety glasses.

2. Coat the rust preventative with a liberal amount of cleaner/degreaser, then let it soak for 5–10 minutes.

3. Wipe off the surfaces. If your cleaner/degreaser is effective, the rust preventative will wipe off easily. If you have a plastic paint scraper, scrape off as much as you can first, then wipe off the rest with the rag.

4. Repeat **Steps 2–3** as necessary until clean, then coat all unpainted surfaces with a quality metal protectant to prevent rust.

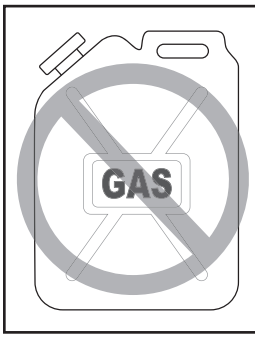

WARNING

Gasoline and petroleum products have low flash points and can explode or cause fire if used to clean machinery. Avoid using these products to clean machinery.

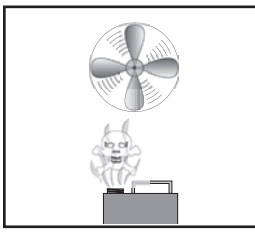

CAUTION

Many cleaning solvents are toxic if inhaled. Only work in a well-ventilated area.

NOTICE

Avoid chlorine-based solvents, such as acetone or brake parts cleaner, that may damage painted surfaces.

T23692—Orange Power Degreaser
A great product for removing the waxy shipping grease from the ***non-painted*** parts of the machine during clean up.

Figure 7. T23692 Orange Power Degreaser.

Site Considerations

Weight Load

Refer to the **Machine Data Sheet** for the weight of your machine. Make sure that the surface upon which the machine is placed will bear the weight of the machine, additional equipment that may be installed on the machine, and the heaviest workpiece that will be used. Additionally, consider the weight of the operator and any dynamic loading that may occur when operating the machine.

Space Allocation

Consider the largest size of workpiece that will be processed through this machine and provide enough space around the machine for adequate operator material handling or the installation of auxiliary equipment. With permanent installations, leave enough space around the machine to open or remove doors/covers as required by the maintenance and service described in this manual. **See below for required space allocation.**

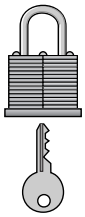

⚠CAUTION

Children or untrained people may be seriously injured by this machine. Only install in an access restricted location.

Physical Environment

The physical environment where the machine is operated is important for safe operation and longevity of machine components. For best results, operate this machine in a dry environment that is free from excessive moisture, hazardous chemicals, airborne abrasives, or extreme conditions. Extreme conditions for this type of machinery are generally those where the ambient temperature range exceeds 41°–104°F; the relative humidity range exceeds 20%–95% (non-condensing); or the environment is subject to vibration, shocks, or bumps.

Electrical Installation

Place this machine near an existing power source. Make sure all power cords are protected from traffic, material handling, moisture, chemicals, or other hazards. Make sure to leave enough space around machine to disconnect power supply or apply a lockout/tagout device, if required.

Lighting

Lighting around the machine must be adequate enough that operations can be performed safely. Shadows, glare, or strobe effects that may distract or impede the operator must be eliminated.

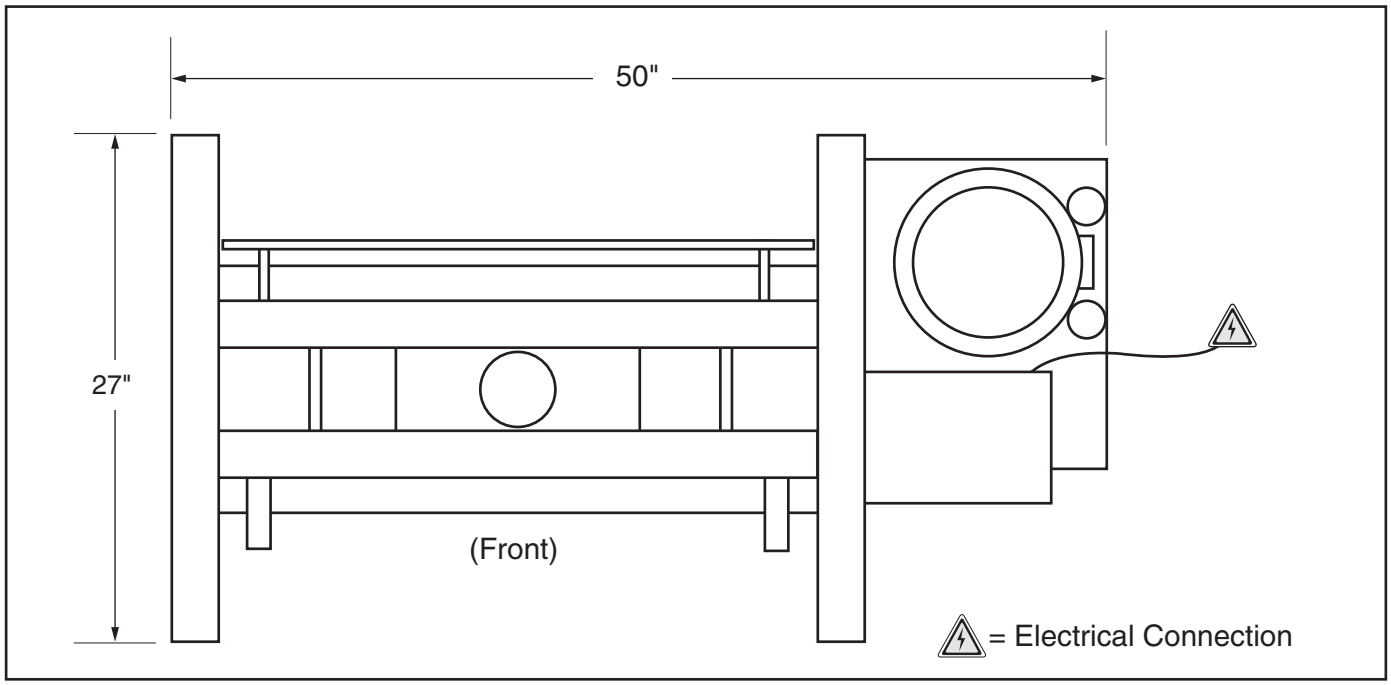

Figure 8. Minimum working clearances.

Lifting & Placing

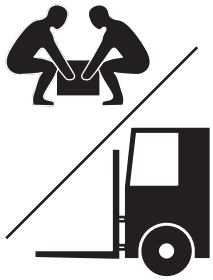

⚠WARNING

HEAVY LIFT!

Straining or crushing injury may occur from improperly lifting machine or some of its parts. To reduce this risk, get help from other people and use a forklift (or other lifting equipment) rated for weight of this machine.

Do not attempt to lift or move this machine without using the proper lifting equipment (such as forklift or crane) or getting the necessary assistance from other people.

To lift and move machine:

1. Remove shipping crate top and sides, then remove small components from shipping pallet.

2. Move press to its final location while it is still attached to shipping pallet.

3. Unbolt machine from shipping pallet.

4. Use forklift and lifting straps (see **Figure 9**) to lift machine to just clear pallet, then remove pallet from under machine.

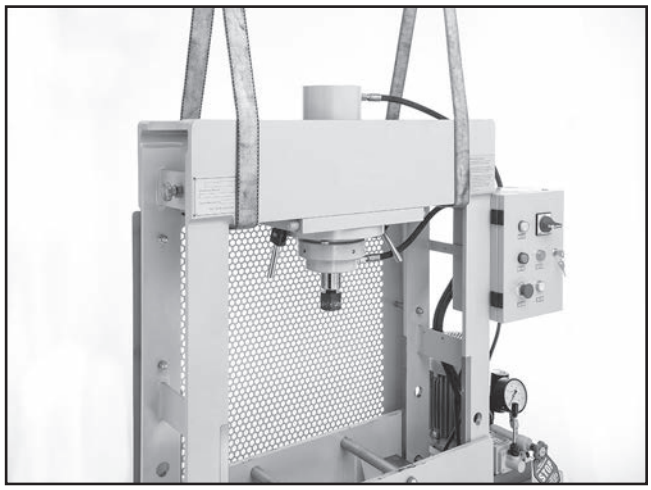

Figure 9. Lifting strap placement on machine.

Anchoring to Floor

Number of Mounting Holes 4
Diameter of Mounting Hardware..... ½"

Anchoring machine to the floor prevents tipping or shifting that may occur during operation with large/heavy workpieces.

If machine is installed in a commercial or workplace setting, or if it is permanently connected (hardwired) to the power supply, local codes may require that it be anchored to the floor.

Anchoring to Concrete Floors

Lag shield anchors with lag screws (see below) are a popular way to anchor machinery to a concrete floor, because the anchors sit flush with the floor surface, making it easy to unbolt and move the machine later, if needed. However, anytime local codes apply, you MUST follow the anchoring methodology specified by the code.

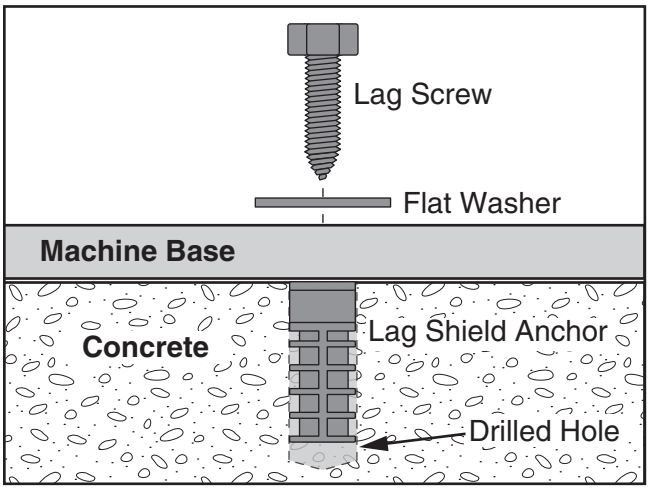

Figure 10. Popular method for anchoring machinery to a concrete floor.

Adding Hydraulic Fluid

This machine is shipped without hydraulic fluid. Before running machine for the first time you must fill the hydraulic fluid tank.

NOTICE

Do not run machine without hydraulic fluid. Operating hydraulic pump without fluid can quickly damage it. Damage caused by running this machine without hydraulic fluid will not be covered under warranty.

Item(s) Needed	Qty
ISO-46 Hydraulic Fluid	13 Gal.
Funnel	1

To add hydraulic fluid:

1. Remove hydraulic tank fill cap shown in **Figure 11A**, and insert a large funnel into top of tank.

2. Fill hydraulic tank until fluid reaches center of mark on sight glass—approximately 13 gallons (see **Figure 11B**).

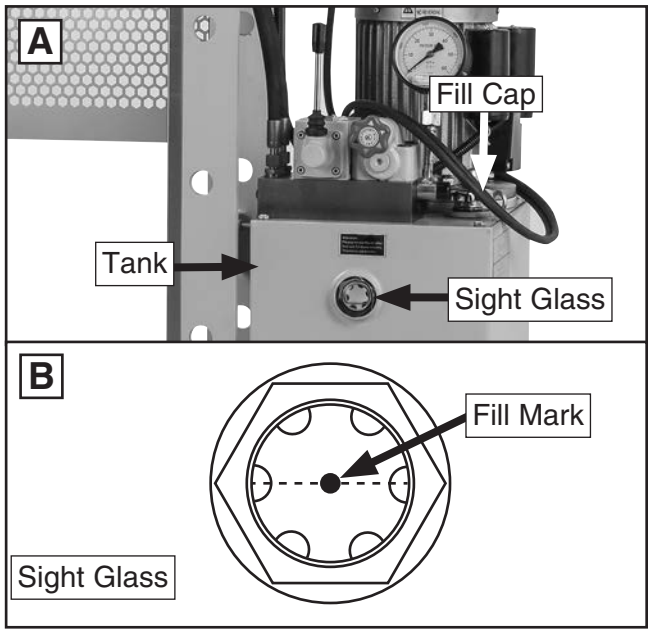

Figure 11. Cap and sight glass hydraulic tank.

3. Replace fill cap.

Test Run

Once assembly is complete, test run the machine to ensure it is properly connected to power and safety components are functioning correctly.

If you find an unusual problem during the test run, immediately stop the machine, disconnect it from power, and fix the problem BEFORE operating the machine again. The **Troubleshooting** table in the **SERVICE** section of this manual can help.

The test run consists of verifying the following: 1) the motor powers up and runs correctly, 2) the Emergency Stop button works correctly.

⚠WARNING

Serious injury or death can result from using this machine BEFORE understanding its controls and related safety information. DO NOT operate, or allow others to operate, machine until the information is understood.

⚠WARNING

DO NOT start machine until all preceding setup instructions have been performed. Operating an improperly set up machine may result in malfunction or unexpected results that can lead to serious injury, death, or machine/property damage.

To test run machine:

1. Clear all setup tools away from machine.

2. Press EMERGENCY STOP Button (see **Figure 12**).

3. Connect machine to power source.

4. Turn master power switch to "I" position (see **Figure 12**). Power lamp will illuminate when machine is receiving power.

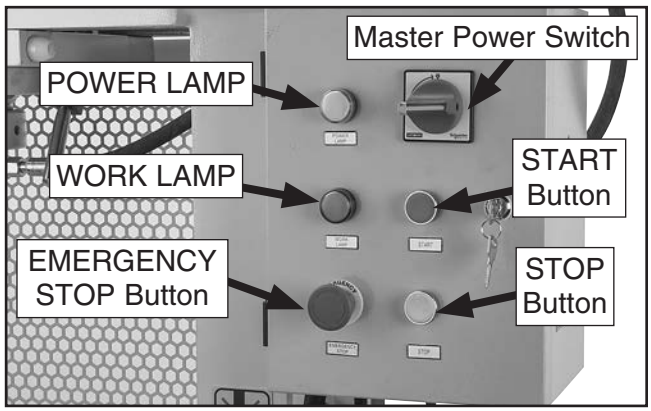

Figure 12. Control panel components.

5. Twist EMERGENCY STOP Button clockwise until it springs out (see **Figure 13**).

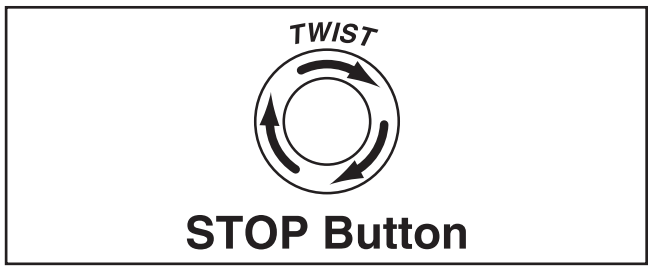

Figure 13. Resetting the EMERGENCY STOP Button.

6. Press START button to turn motor ***ON***. WORK LAMP light will illuminate when motor is running. Verify motor starts up and runs smoothly without any problems or noises.

7. Press EMERGENCY STOP button to turn machine ***OFF***.

8. WITHOUT resetting EMERGENCY STOP Button, start machine by pressing the START button.

   — If machine *does not* start, EMERGENCY STOP Button is working correctly. Test Run is complete.

   — If machine *does* start, immediately turn it ***OFF*** and disconnect power. The EMERGENCY STOP safety feature is NOT working properly. This safety feature must work properly before proceeding with regular operations.

Hydraulic System Priming

To prime the hydraulic system:

1. Turn machine **ON**.

2. Fully extend, then retract ram using ram control lever (see **Figure 14**).

3. Repeat **Step 2**.

4. DISCONNECT MACHINE FROM POWER!

5. Check hydraulic tank fluid level.

   —If fluid level is still at fill mark continue to next step.

   —If fluid level is below fill mark add hydraulic fluid (see **Page 16)**.

6. Repeat **Step 2**.

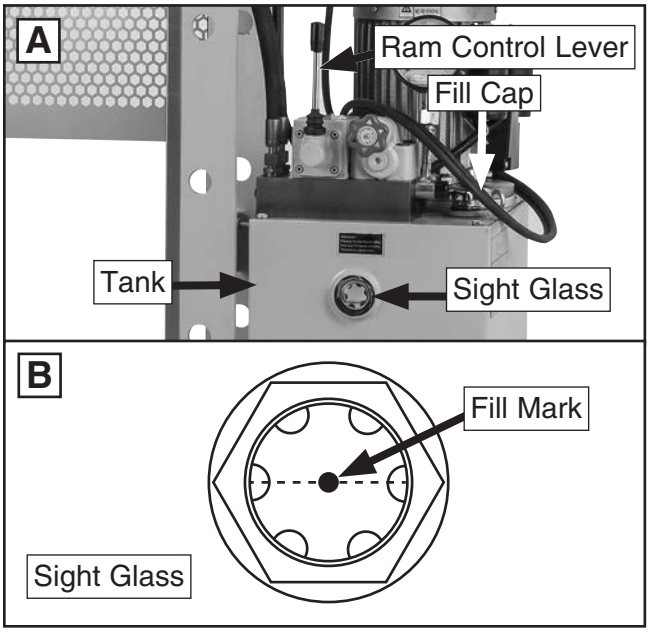

Figure 14. Location of ram control lever and sight glass.

SECTION 4: OPERATIONS

Operation Overview

The purpose of this overview is to provide the novice machine operator with a basic understanding of how the machine is used during operation, so the machine controls/components discussed later in this manual are easier to understand.

Due to the generic nature of this overview, it is **not** intended to be an instructional guide. To learn more about specific operations, read this entire manual, seek additional training from experienced machine operators, and do additional research outside of this manual by reading "how-to" books, trade magazines, or websites.

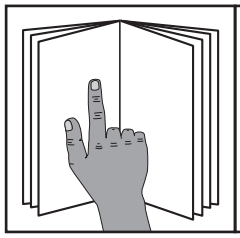

WARNING

To reduce your risk of serious injury, read this entire manual BEFORE using machine.

WARNING

To reduce risk of eye injury from flying debris, always wear safety glasses and a face shield when operating this machine.

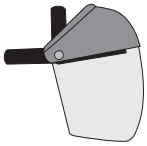

NOTICE

If you are not experienced with this type of machine, WE STRONGLY RECOMMEND that you seek additional training outside of this manual. Read books/magazines or get formal training before beginning any projects. Regardless of the content in this section, Grizzly Industrial will not be held liable for accidents caused by lack of training.

To complete a typical operation, the operator does the following:

1. Examines workpiece to make sure it is suitable for pressing.
2. Adjusts press bed height (see **Adjusting Press Bed Height** on **Page 1**) to accommodate workpiece.
3. Places workpiece on press bed or press blocks, and either centers workpiece pressing point under ram or centers ram over workpiece pressing point.
4. Puts on safety glasses and face shield.
5. Turns motor ***ON*** and lowers ram lightly against workpiece.
6. Verifies workpiece has not shifted position and completes pressing operation.

NOTICE

Machine damage may occur if ram exerts maximum force when extended beyond 3/4 of its total length. Rather than over-extend ram, raise table as necessary to reduce ram stroke length.

7. Raises ram and removes workpiece from press bed.
8. Turns machine ***OFF***.

CAUTION

NEVER exceed maximum rated pressure of press (25 MPa/3600 psi) or machine damage or personal injury could occur!

Adjusting Press Bed Height

It is important that the press bed be set to keep the workpiece as close to the ram as possible to ensure optimum operation.

To raise/lower press bed:

1. Completely lower ram and loosen ram head enough to mount lifting chain collar in center of ram head (see **Figure 15**).

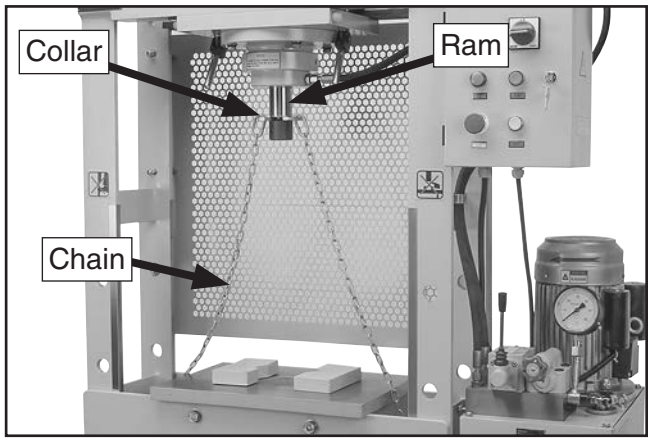

Figure 15. Lifting chain collar attached to ram.

2. Tighten ram head enough to secure collar.

3. Insert lifting chain into grooves on each side of press bed.

   Note: *Ensure chains are set into bed grooves evenly (similar amount of slack in each chain) to ensure press bed is lifted evenly.*

4. Slowly raise ram to apply tension to chains, making sure table is lifted evenly (see **Figure 16**). Raise press bed enough to allow support rods to be inserted into next set of placement holes.

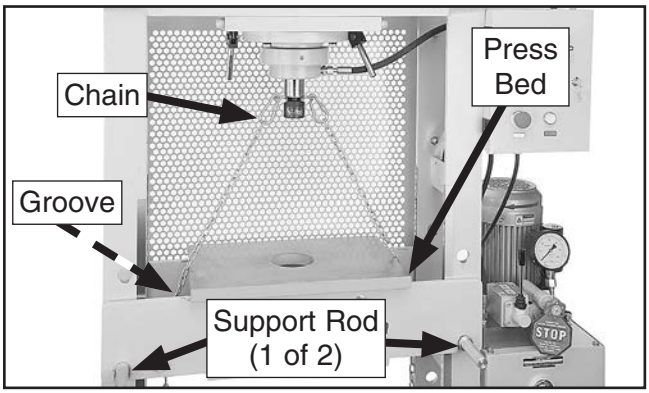

Figure 16. Press bed lifted by ram.

5. Lower press bed onto support rods and fully extend ram. Repeat **Steps 3–5** until press bed it set at appropriate height for operation.

6. Remove lifting chain by loosening ram head and removing collar. Tighten ram head after chain is removed.

NOTICE

Machine damage may occur to ram head threads if ram is actuated while ram head is loose. Ensure ram head is fully tighten before operating machine.

Pressing Workpiece

For best result carefully follow steps below.

IMPORTANT: *Never exceed maximum applied pressure of 60,000 pounds (30 Tons).*

To press a workpiece:

1. Turn machine ***ON***.

2. Adjust press bed height (see **Adjusting Press Bed Height** on **Page 19**) to allow ram adequate space to extend and retract. Do not position press table too low to avoid over-extending ram during operation.

3. Place press blocks on press bed, and center workpiece on press blocks (see **Figure 17**).

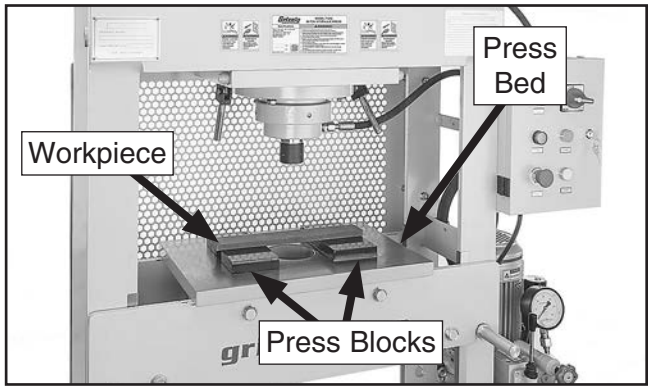

Figure 17. Workpiece positioned on press blocks.

⚠WARNING

To reduce risk of eye injury from flying debris, always wear safety glasses and a face shield when operating this machine.

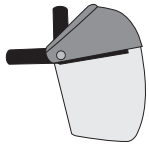

⚠CAUTION

NEVER exceed maximum pressure rating of press or machine damage or personal injury could occur!

4. Press START button and pull ram control lever to DOWN position to lower ram until it just touches workpiece (see **Figure 18**).

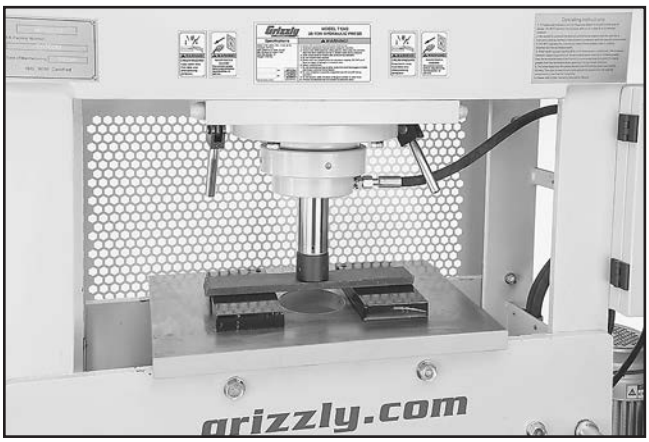

Figure 18. Ram extended to workpiece.

5. Ensure workpiece has not shifted position, is fully supported, and is square with the ram. Complete pressing operation by engaging ram control lever.

   — If pressing workpiece to a specific pressure, use the pressure gauge located beside the ram control lever.

   — If pressing workpiece to a specific angle or shape, apply pressure to workpiece gradually, and regularly decrease pressure to check workpiece until correct angle/shape is achieved.

NOTICE

Machine damage may occur if you exert maximum ram force when it is extended more than ¾ of its total length. Adjust table height to reduce ram stroke length.

6. Raise ram and remove workpiece from press bed.

7. Press STOP button to turn hydraulic pump motor ***OFF***.

8. Turn master power switch to "0" to turn machine ***OFF***.

Positioning Ram Horizontally

The ram cylinder can be positioned and secured anywhere along the top frame of the press to align with off-center workpieces.

To position ram cylinder:

1. Position press bed height (see **Adjusting Press Bed Height** on **Page 19**) to allow ram adequate space above workpiece.

> **NOTICE**
>
> **Machine damage may occur if you exert maximum ram force when it is extended more than ¾ of its total length. Adjust table height to reduce ram stroke length.**

2. Loosen both cylinder locks, then move ram till it is directly above workpiece (see **Figure 17**).

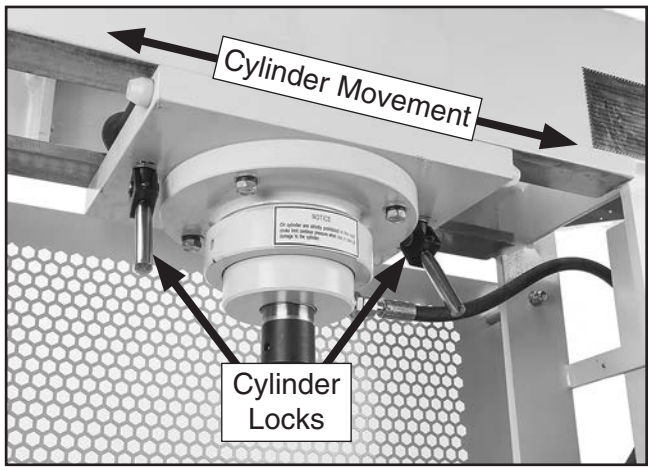

Figure 19. Ram cylinder positioned horizontally above off-center workpiece.

3. Tighten cylinder locks and lower ram until it just touches workpiece to ensure cylinder remains stationary and workpiece does not shift during operation.

Adjusting Pressure

Maximum Safe Pressure..... 3600 PSI

The amount of force applied to the workpiece can be adjusted using the pressure adjustment valve (see **Figure 20**).

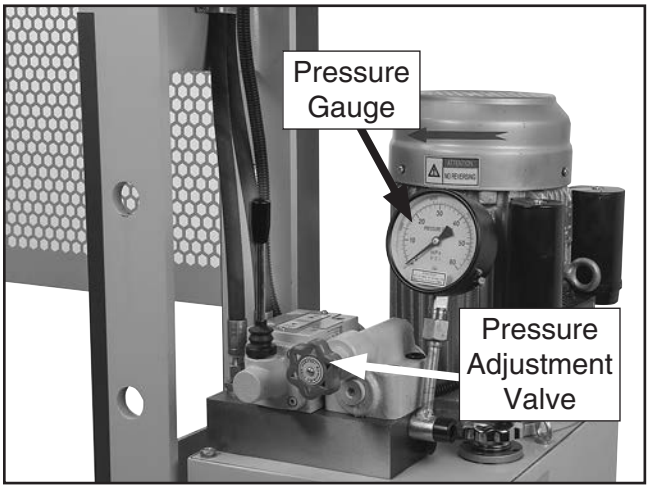

Figure 20. Location of pressure gauge and adjustment valve.

Force applied to the workpiece is measured in PSI (Pounds Per Square Inch) on the pressure gauge. To adjust pressure, turn machine ***ON*** and pull ram control lever to the DOWN position.

When the pressure for the current setting is reached, the sound of the motor will change from a low-pitched whine to a high-pitched whine. The reading on the pressure gauge will remain stationary, signaling the regulator is bypassing the adjustment valve to maintain the current pressure.

Slowly turn the adjustment valve clockwise to *increase* pressure or counterclockwise to *decrease* pressure.

Stop rotating the adjustment valve once the desired pressure has been reached on the pressure gauge.

SECTION 5: ACCESSORIES

⚠WARNING

Installing unapproved accessories may cause machine to malfunction, resulting in serious personal injury or machine damage. To reduce this risk, only install accessories recommended for this machine by Grizzly.

NOTICE

Refer to our website or latest catalog for additional recommended accessories.

Basic Eye Protection

T20502—Face Shield Crown Protector 7"
T20503—Face Shield Window
T20451—"Kirova" Clear Safety Glasses
T20452—"Kirova" Anti-Reflective S. Glasses
T20456—DAKURA Safety Glasses

Figure 21. Assortment of basic eye protection.

T26544—LED Light with 30lb Mag Base and Flexible Arm

This high-intensity LED worklight features a powerful magnetic base and a 9" flexible clamp arm, allowing you to mount this wherever you need light. It's also removeable, doubling as a flashlight! This ultra-bright light has three modes: high beam, low beam, and an emergency flash. Includes the LED light, base, plate, and 3 AAA batteries.

Figure 22. T26544 LED Light with 30lb Mag Base and Flexible Arm.

G2871—Boeshield® T-9 12 Oz. Spray
G2870—Boeshield® T-9 4 Oz. Spray

Perfect for unpainted cast iron surfaces, this ozone-friendly protective spray penetrates deep and really holds up against corrosive environments. Lubricates metals for months and is also safe for use on most paints, plastics, and vinyls. Developed by Boeing engineers for aircraft applications—this is the best!

Figure 23. Boeshield® T-9 spray.

SECTION 6: MAINTENANCE

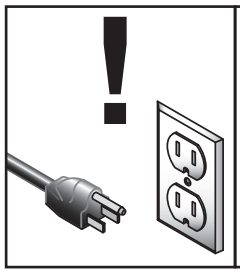

⚠WARNING

To reduce risk of shock or accidental startup, always disconnect machine from power before adjustments, maintenance, or service.

Schedule

For optimum performance from this machine, this maintenance schedule must be strictly followed.

Ongoing

To maintain a low risk of injury and proper machine operation, if you ever observe any of the items below, shut down the machine immediately and fix the problem before continuing operations:

- Loose mounting bolts.
- Hydraulic fluid leak.
- Worn or damaged wires.
- Any other unsafe condition.

Weekly Maintenance

- Lubricate ram cylinder track.
- Check/adjust hydraulic tank oil level.
- Apply rust preventative to all cast-iron surfaces.

Monthly Check

- Inspect lifting chain for wear.
- Inspect press bed for wear/damage.
- Every 5,000 hours change hydraulic fluid.

Cleaning & Protecting

Cleaning the Model T1242 is relatively easy. Wipe off any dust or debris with a dry cloth. If any oil or grease has built up, use a grease-dissolving cleaner to remove it.

Protect the unpainted cast-iron press bed by wiping it clean after every use—this ensures moisture does not remain on bare metal surfaces. Keep the bed rust-free with regular applications of products like Boeshield® T-9 (see **Page 22** for more details).

Lubrication

Clean off the hydraulic cylinder track with a clean rag and apply light machine oil for smooth operation (see **Figure 24**). Move the hydraulic cylinder through its full range of motion several times to evenly distribute oil.

Item(s) Needed	**Qty**
Light Machine Oil	As Needed

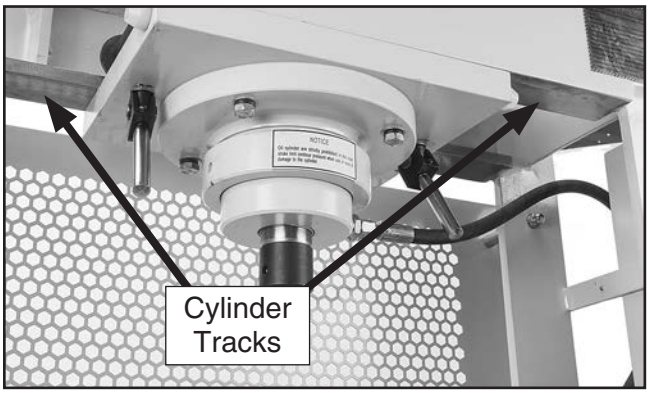

Figure 24. Location of hydraulic cylinder track.

SECTION 7: SERVICE

Review the troubleshooting procedures in this section if a problem develops with your machine. If you need replacement parts or additional help with a procedure, call our Technical Support. **Note:** *Please gather the serial number and manufacture date of your machine before calling.*

Troubleshooting

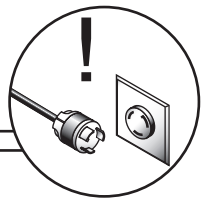

Motor & Electrical

Symptom	Possible Cause	Possible Solution
Machine does not start, or power supply breaker immediately trips after startup.	1. Emergency Stop button engaged/not reset. 2. Master power switch in "0" position. 3. Electrical cabinet open/safety switch at fault. 4. Incorrect power supply voltage or circuit size. 5. Power supply circuit breaker tripped or fuse blown. 6. Start capacitor at fault. 7. Thermal overload relay has tripped. 8. Motor at fault.	1. Rotate button head to reset. 2. Turn master power switch to "1" position. 3. Close/lock electrical cabinet door. 4. Ensure correct power supply voltage and circuit size. 5. Ensure circuit is sized correctly and free of shorts, reset circuit breaker or replace fuse. 6. Test/replace. 7. Reset; contact tech support if relay frequently trips. 8. Test/repair/replace.
Motor stalls after running.	1. Magnetic switch contactor at fault (not energized/has poor contacts). 2. Run capacitor at fault. 3. Motor bearings at fault. 4. Motor at fault.	1. Test all legs for power/replace. 2. Test/replace. 3. Test/replace bearings. 4. Test/repair/replace.
Machine has vibration or noisy operation.	1. Machine incorrectly mounted to floor. 2. Motor or component loose. 3. Motor fan rubbing on fan cover. 4. Motor at fault.	1. Adjust feet, shim, or tighten mounting hardware. 2. Inspect/replace damaged bolts/nuts, and retighten with thread-locking fluid. 3. Fix/replace fan cover; replace loose/damaged fan. 4. Test/repair/replace.

Operations & Hydraulic System

Symptom	Possible Cause	Possible Solution
Ram will not move.	1. Pump not on. 2. Pressure set too low. 3. Fluid level too low. 4. Obstruction in hydraulic line. 5. Motor at fault. 6. Motor coupling has failed. 7. Pump has seized. 8. Pressure valve at fault. 9. Hydraulic ram has failed.	1. Ensure START button has been pressed and WORK LAMP light is on. 2. Adjust pressure valve to appropriate PSI for operation (**Page 21**). 3. Check and fill tank to proper level. 4. Check hydraulic lines for obstructions. 5. Test/repair/replace. 6. Test/repair/replace. 7. Test/repair/replace. 8. Test/repair/replace. 9. Test/repair/replace.

Operations & Hydraulic System

Symptom	Possible Cause	Possible Solution
Ram moves slowly or is weak.	1. Pressure set too low. 2. System leaking. 3. Filter clogged. 4. Obstruction in hydraulic line. 5. Pressure valve at fault. 6. Ram control valve at fault. 7. Ram seals at fault. 8. Motor at fault.	1. Adjust pressure valve to appropriate PSI for operation (**Page 21**). 2. Clean/locate, repair leak. 3. Check/clean/replace. 4. Check hydraulic lines for obstructions. 5. Test/repair/replace. 6. Test/repair/replace. 7. Test/repair/replace. 8. Test/repair/replace.
Ram moves erratically.	1. Air in hydraulic system. 2. Fluid level too low. 3. Air getting into system. 4. Hydraulic fluid contaminated.	1. Purge air from hydraulic system (**Page 26**). 2. Check and fill tank to proper level. 3. Tighten, seal, or replace fittings, gaskets or seals. 4. Drain and replace hydraulic fluid.

Purging Hydraulic System

It is important to ensure as little air as possible in the hydraulic system at all times. Trapped air can cause the ram to act erratically during operation.

To purge the air from the hydraulic system, turn the machine ***ON***. Fully retract the ram into the hydraulic cylinder, then cycle the ram through its full range of motion 4–6 times.

Air has been properly purged when the ram moves smoothly through its full cycle while applying pressure to the workpiece.

Changing Hydraulic Fluid

The hydraulic fluid should be changed after the first 3,000 hours of operations, then every 5,000 hours thereafter.

Items Needed:	**Qty**
ISO-46 Hydraulic Fluid	13 Gallons
Open-Ended Wrench 17mm	1
Clean Rags	As Needed
15 Gallon Drain Pan	1
Funnel	1

To change hydraulic fluid:

1. Position drain pan beneath hydraulic tank and remove fill cap from top of tank.

2. Remove drain plug from bottom of tank (see **Figure 25**). Drain all fluid from hydraulic tank.

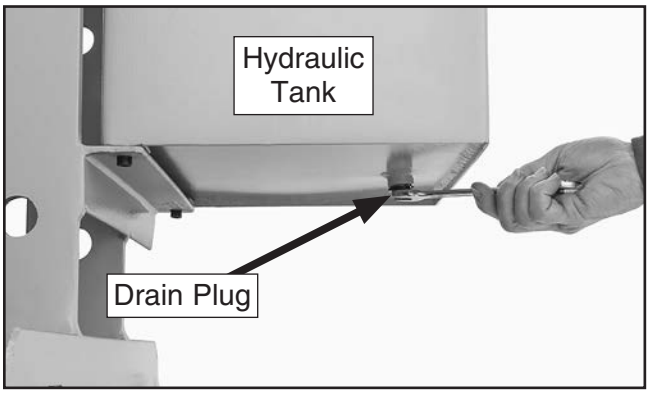

Figure 25. Removing drain plug from bottom of hydraulic tank.

3. Remove drain pan and dispose of fluid according to state and federal regulations.

4. Re-install drain plug, then insert funnel into top of tank and pour in new hydraulic fluid until it reaches fill mark in sight glass (see **Figure 26**).

NOTICE

Hydraulic system must be primed with fluid before pressing a workpiece.

5. Replace fill cap and operate press as outlined in **Purging Hydraulic System** to ensure proper performance.

6. DISCONNECT MACHINE FROM POWER and check hydraulic tank sight glass. Top up tank to fill mark (see **Figure 26**).

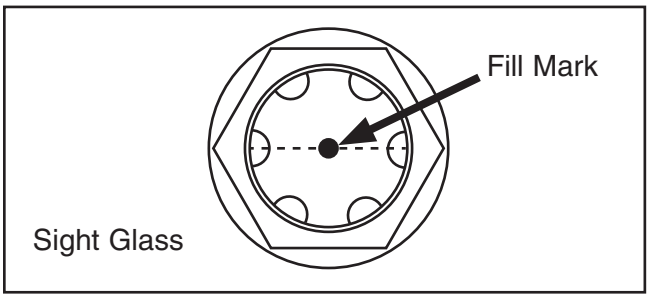

Figure 26. Sight glass fill mark.

7. Connect machine to power and cycle ram through full range of motion one more time before operating.

SECTION 8: WIRING

These pages are current at the time of printing. However, in the spirit of improvement, we may make changes to the electrical systems of future machines. Compare the manufacture date of your machine to the one stated in this manual, and study this section carefully.

If there are differences between your machine and what is shown in this section, call Technical Support at (570) 546-9663 for assistance BEFORE making any changes to the wiring on your machine. An updated wiring diagram may be available. **Note:** *Please gather the serial number and manufacture date of your machine before calling. This information can be found on the main machine label.*

⚠WARNING
Wiring Safety Instructions

SHOCK HAZARD. Working on wiring that is connected to a power source is extremely dangerous. Touching electrified parts will result in personal injury including but not limited to severe burns, electrocution, or death. Disconnect the power from the machine before servicing electrical components!

MODIFICATIONS. Modifying the wiring beyond what is shown in the diagram may lead to unpredictable results, including serious injury or fire. This includes the installation of unapproved aftermarket parts.

WIRE CONNECTIONS. All connections must be tight to prevent wires from loosening during machine operation. Double-check all wires disconnected or connected during any wiring task to ensure tight connections.

CIRCUIT REQUIREMENTS. You MUST follow the requirements at the beginning of this manual when connecting your machine to a power source.

WIRE/COMPONENT DAMAGE. Damaged wires or components increase the risk of serious personal injury, fire, or machine damage. If you notice that any wires or components are damaged while performing a wiring task, replace those wires or components.

MOTOR WIRING. The motor wiring shown in these diagrams is current at the time of printing but may not match your machine. If you find this to be the case, use the wiring diagram inside the motor junction box.

CAPACITORS/INVERTERS. Some capacitors and power inverters store an electrical charge for up to 10 minutes after being disconnected from the power source. To reduce the risk of being shocked, wait at least this long before working on capacitors.

EXPERIENCING DIFFICULTIES. If you are experiencing difficulties understanding the information included in this section, contact our Technical Support at (570) 546-9663.

NOTICE

The photos and diagrams included in this section are best viewed in color. You can view these pages in color at www.grizzly.com.

COLOR KEY

BLACK	Bk	BLUE	Bl	YELLOW	Yl	LIGHT BLUE	Lb
WHITE	Wt	BROWN	Br	YELLOW GREEN	Yg	BLUE WHITE	Bw
GREEN	Gn	GRAY	Gy	PURPLE	Pu	TUR-QUOISE	Tu
RED	Rd	ORANGE	Or	PINK	Pk		

Electrical Components

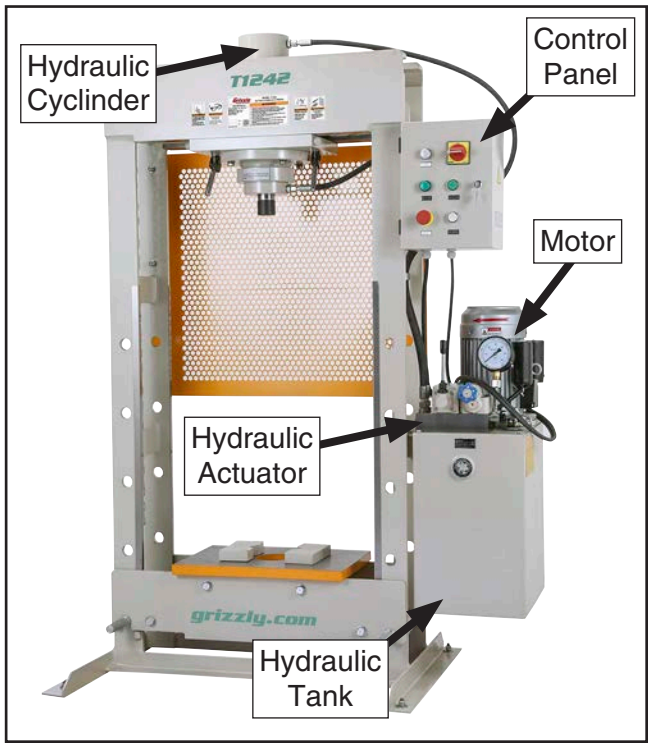

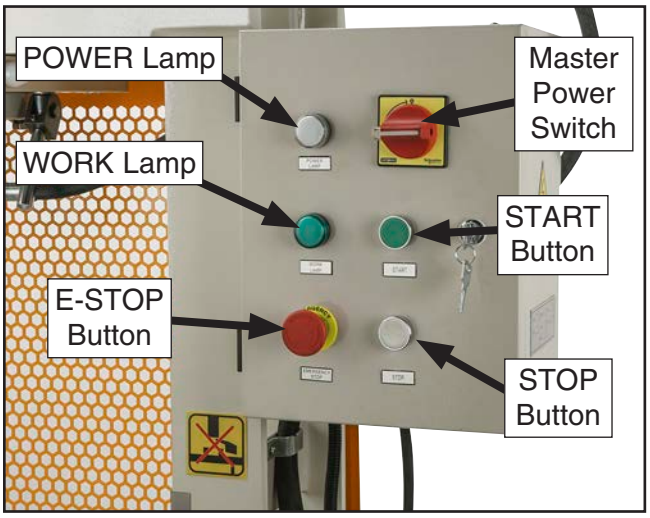

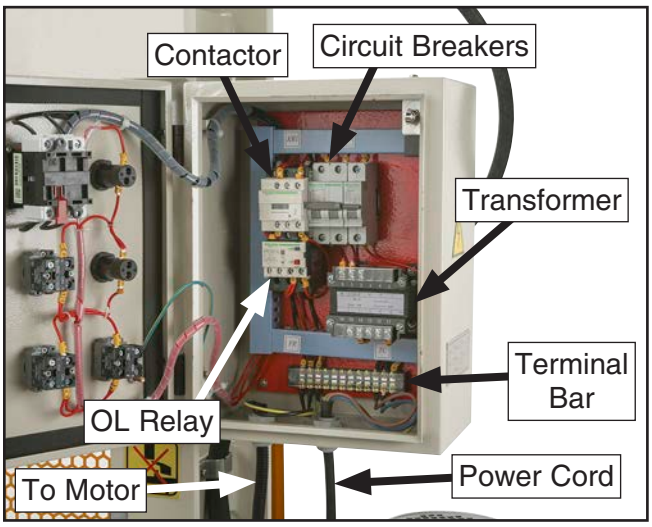

STOP READ ELECTRICAL SAFETY ON PAGE 27!

Wiring Diagram

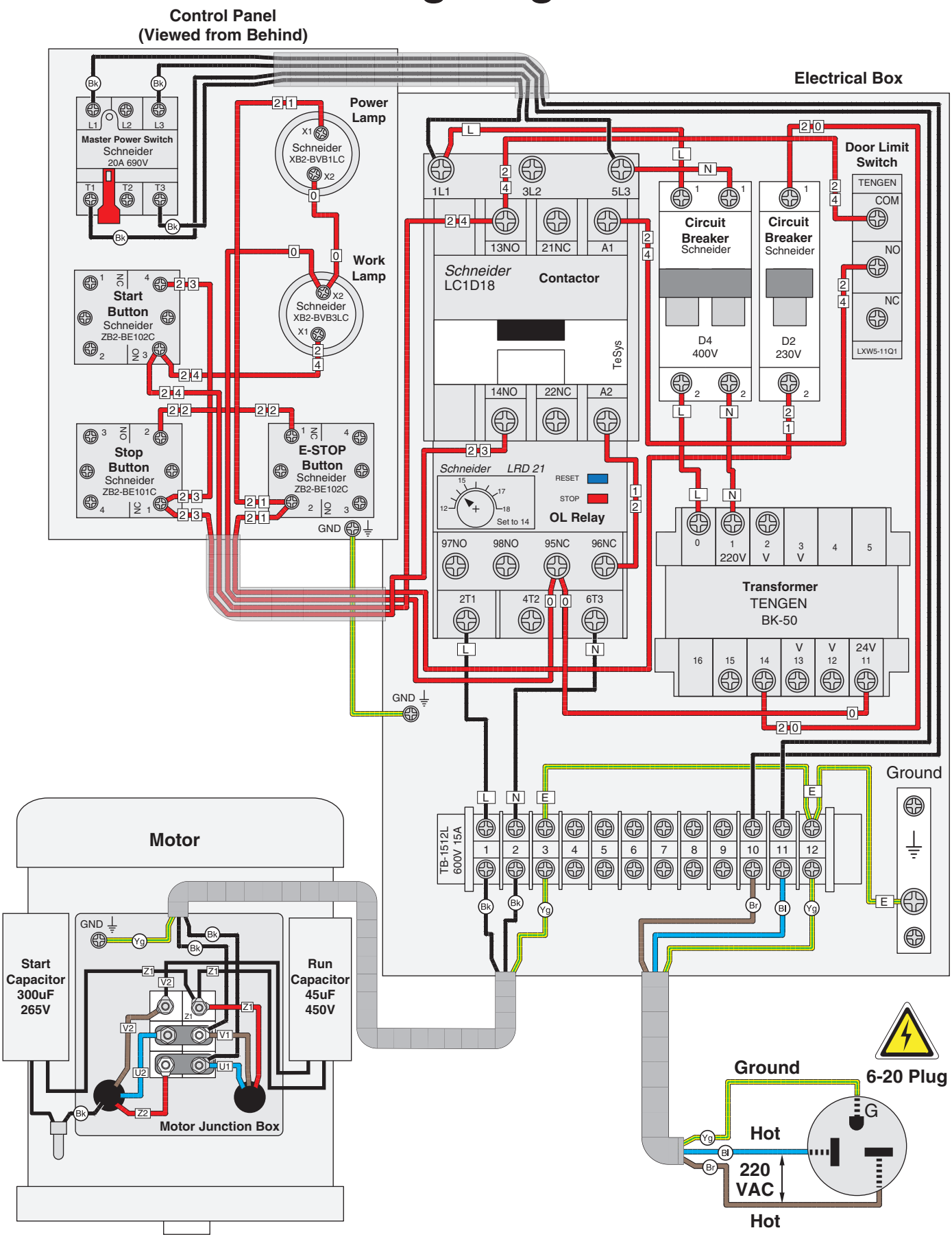

STOP **READ ELECTRICAL SAFETY ON PAGE 27!**

SECTION 9: PARTS

We do our best to stock replacement parts when possible, but we cannot guarantee that all parts shown are available for purchase. Call **(800) 523-4777** or visit **www.grizzly.com/parts** to check for availability.

Machine

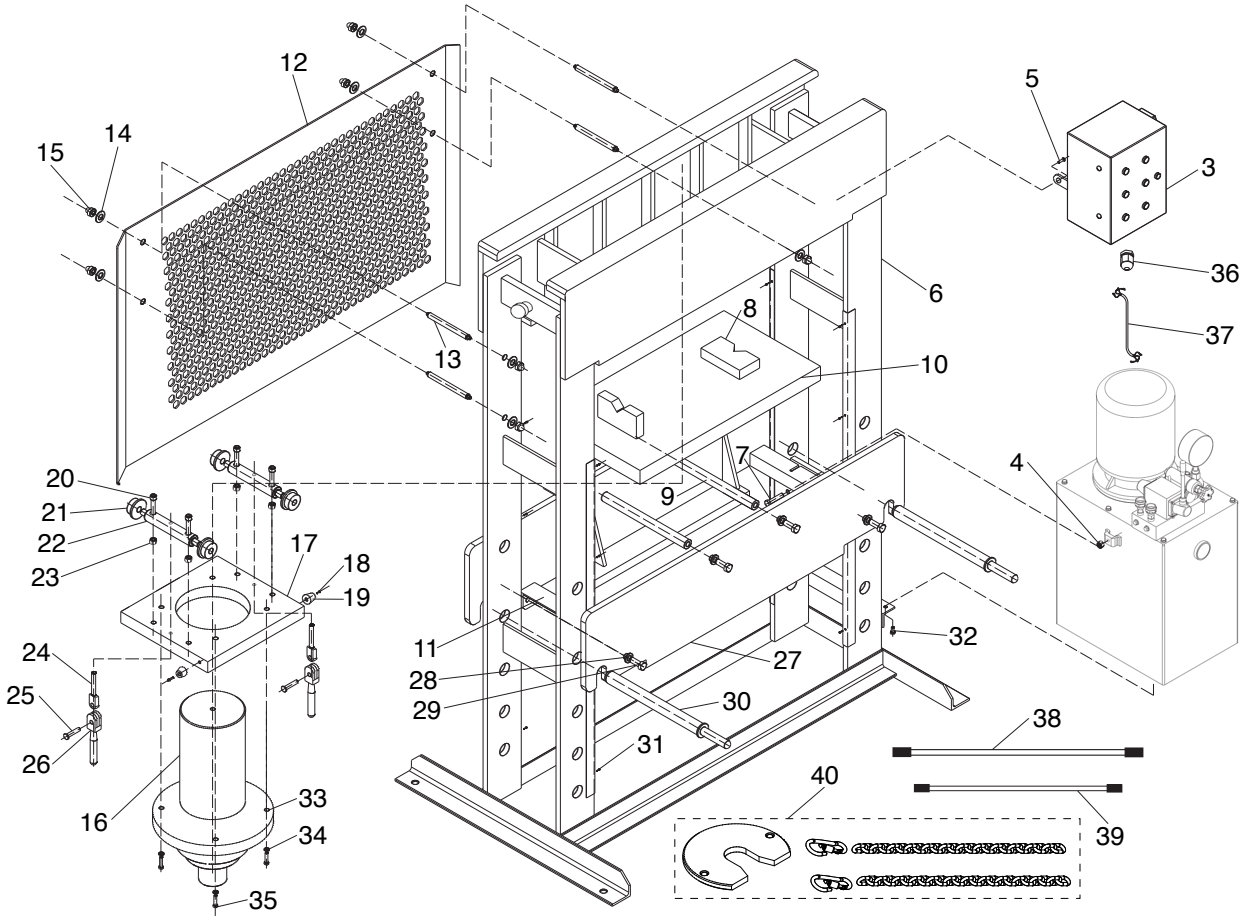

REF	PART #	DESCRIPTION
3	PT1242003	CONTROL PANEL
4	PT1242004	HEX NUT M12-1.75
5	PT1242005	PHLP HD SCR M5-.8 X 10
6	PT1242006	FRAME
7	PT1242007	HEX BOLT M12-1.75 X 55
8	PT1242008	PRESS BLOCK
9	PT1242009	STANDOFF-ROUND FF M10-1.5
10	PT1242010	PRESS BED
11	PT1242011	ANGLE IRON PLATE
12	PT1242012	SAFETY GUARD
13	PT1242013	STANDOFF-RD MM M10-1.5 X 14, M10-1.5 X 26
14	PT1242014	FLAT WASHER 10MM
15	PT1242015	ACORN NUT M10-1.5
16	PT1242016	RAM CYLINDER ASSEMBLY
17	PT1242017	PLATE
18	PT1242018	PHLP HD SCR M6-1 X 10
19	PT1242019	RUBBER BUMPER
20	PT1242020	CAP SCREW M8-1.25 X 80
21	PT1242021	STEEL KNURLED WHEEL

REF	PART #	DESCRIPTION
22	PT1242022	CYLINDER LOCK SHAFT
23	PT1242023	HEX NUT M8-1.25
24	PT1242024	THREADED ROD
25	PT1242025	HEADED PIN
26	PT1242026	HANDLE 16 X 88, M12-1.75 X 10
27	PT1242027	BEAM
28	PT1242028	FLAT WASHER 16MM
29	PT1242029	HEX BOLT M16-2 X 36
30	PT1242030	SUPPORT ROD
31	PT1242031	HEX HD SCREW M4-.7 X 6
32	PT1242032	CAP SCREW M8-1.25 X 20
33	PT1242033	FLAT WASHER 12MM
34	PT1242034	LOCK WASHER 12MM
35	PT1242035	HEX BOLT M12-1.75 X 58
36	PT1242036	STRAIN RELIEF TYPE-3 M20-1.5
37	PT1242037	CONTROL PANEL CORD 10G 3W 24"
38	PT1242038	HIGH PRESSURE HOSE 8II-1600 M18 X 1.5
39	PT1242039	HIGH PRESSURE HOSE 8II-1250 M18 X 1.5
40	PT1242040	CHAIN ASSEMBLY

Pump

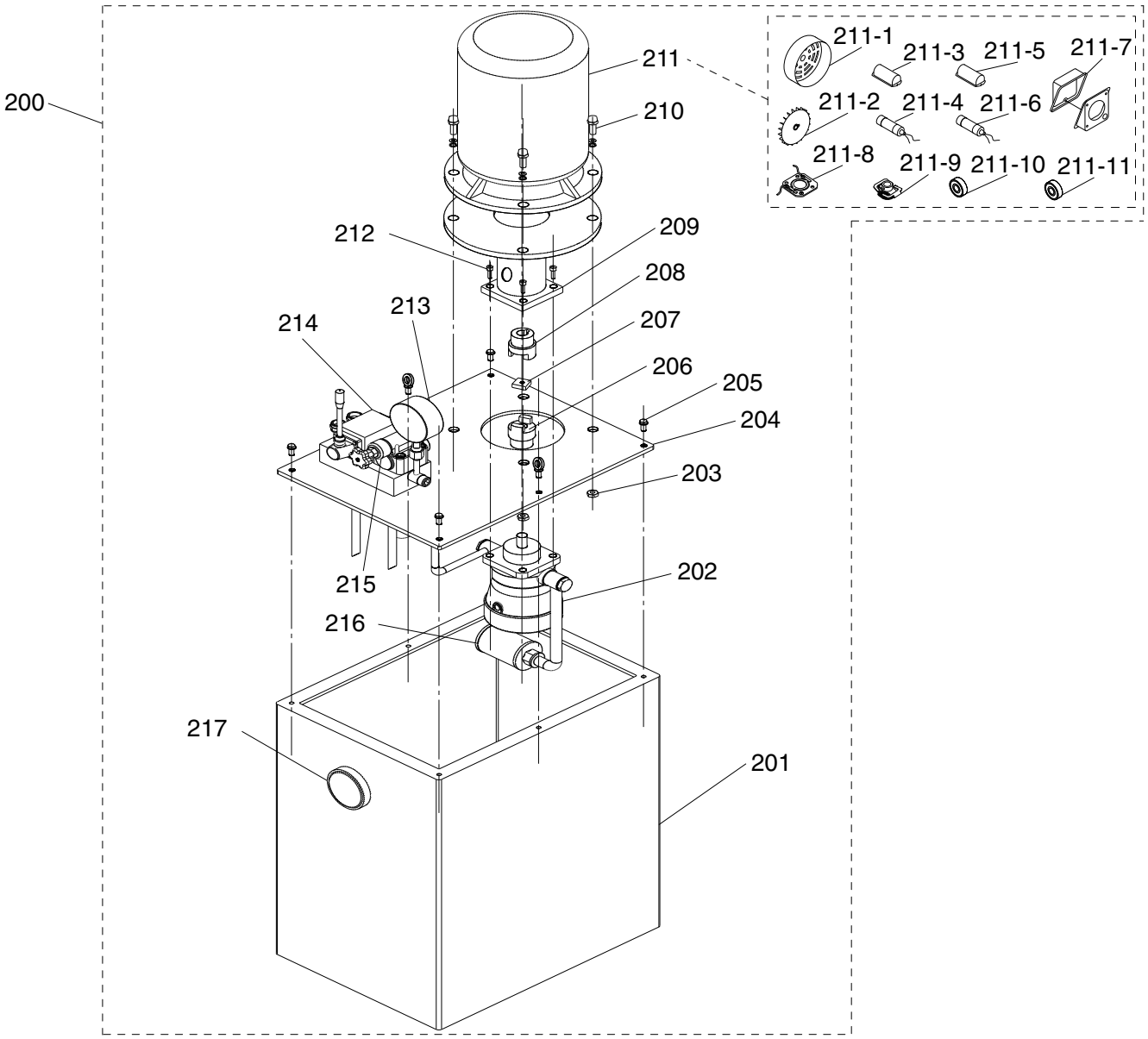

REF	PART #	DESCRIPTION
200	PT1242000	PUMP/TANK ASSEMBLY
201	PT1242201	HYDRAULIC FLUID RESERVOIR
202	PT1242202	PUMP
203	PT1242203	HEX NUT M10-1.5
204	PT1242204	COVER PLATE
205	PT1242205	HEX BOLT M8-1.25 X 25
206	PT1242206	PUMP COUPLER
207	PT1242207	BLOCK
208	PT1242208	MOTOR COUPLER
209	PT1242209	MOTOR SUPPORT
210	PT1242210	HEX BOLT M10-1.5 X 50
211	PT1242211	MOTOR 3HP 220V 1-PH
211-1	PT1242211-1	MOTOR FAN COVER
211-2	PT1242211-2	MOTOR FAN
211-3	PT1242211-3	R CAPACITOR COVER

REF	PART #	DESCRIPTION
211-4	PT1242211-4	R CAPACITOR 45M 450V 2-1/2 X 4
211-5	PT1242211-5	S CAPACITOR COVER
211-6	PT1242211-6	S CAPACITOR 300M 265V 2 X 4
211-7	PT1242211-7	MOTOR JUNCTION BOX
211-8	PT1242211-8	CONTACT POINTS
211-9	PT1242211-9	CENTRIFUGAL SWITCH
211-10	PT1242211-10	BALL BEARING 6206-2RS (FRONT)
211-11	PT1242211-11	BALL BEARING 6206-2RS (BACK)
212	PT1242212	CAP SCREW M8-1.25 X 20
213	PT1242213	PRESSURE GAUGE
214	PT1242214	DIRECTIONAL VALVE
215	PT1242215	PRESSURE ADJUSTMENT VALVE
216	PT1242216	OIL FILTER
217	PT1242217	SIGHT GLASS M42-1.5

Cylinder

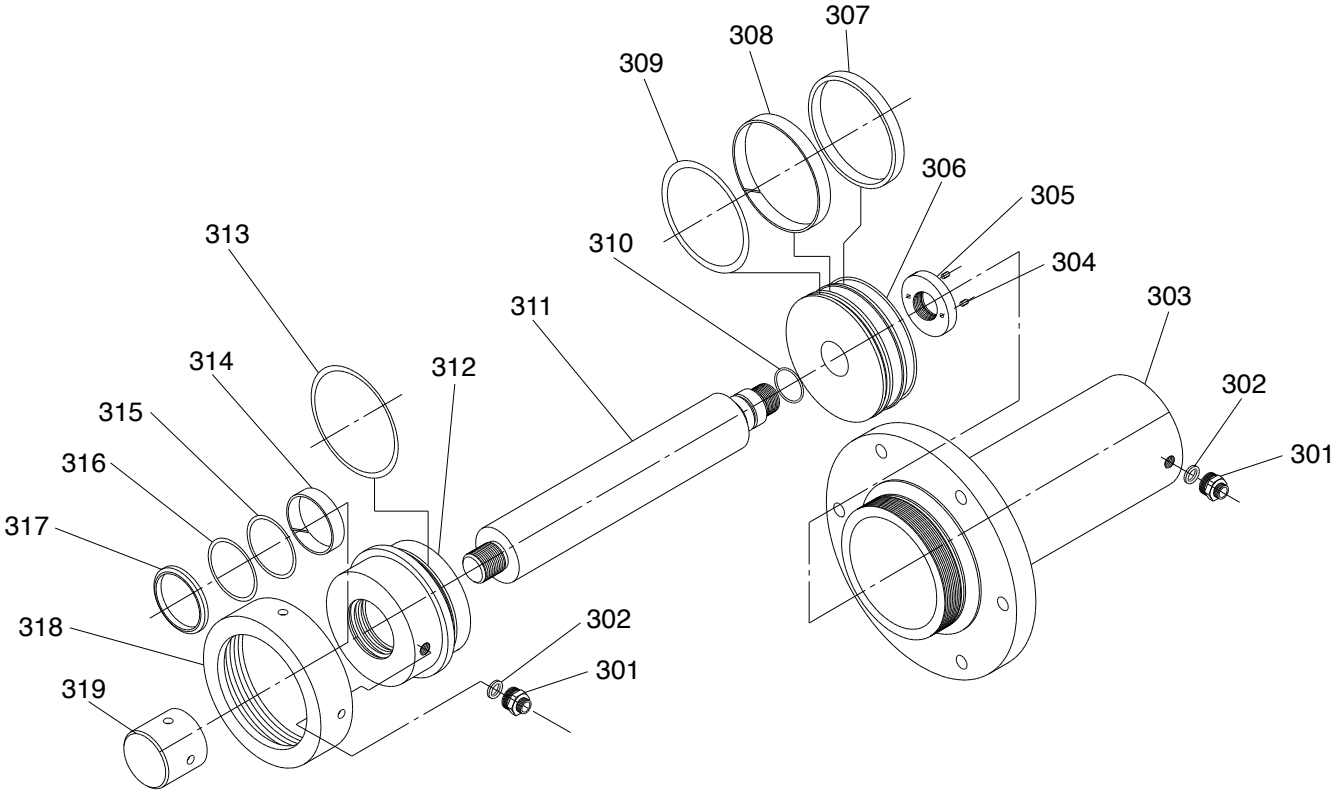

REF	PART #	DESCRIPTION
301	PT1242301	ADAPTER
302	PT1242302	FLAT WASHER 10MM
303	PT1242303	CYLINDER BARREL
304	PT1242304	SET SCREW M8-1.25 X 16
305	PT1242305	LOCK RING
306	PT1242306	PISTON
307	PT1242307	SEAL D125
308	PT1242308	GUIDANCE TAPE 15 X 2.5 X 382
309	PT1242309	O-RING 5.7 X 125
310	PT1242310	O-RING 3.1 X 35

REF	PART #	DESCRIPTION
311	PT1242311	PISTON ROD
312	PT1242312	CYLINDER END
313	PT1242313	O-RING 3.1 X 125
314	PT1242314	GUIDANCE TAPE 20 X 3 X 165
315	PT1242315	O-RING 5.7 X 60
316	PT1242316	O-RING 5.7 X 60
317	PT1242317	SCRAPER SEAL 50MM
318	PT1242318	LOCKING RING
319	PT1242319	RAM HEAD

Electrical

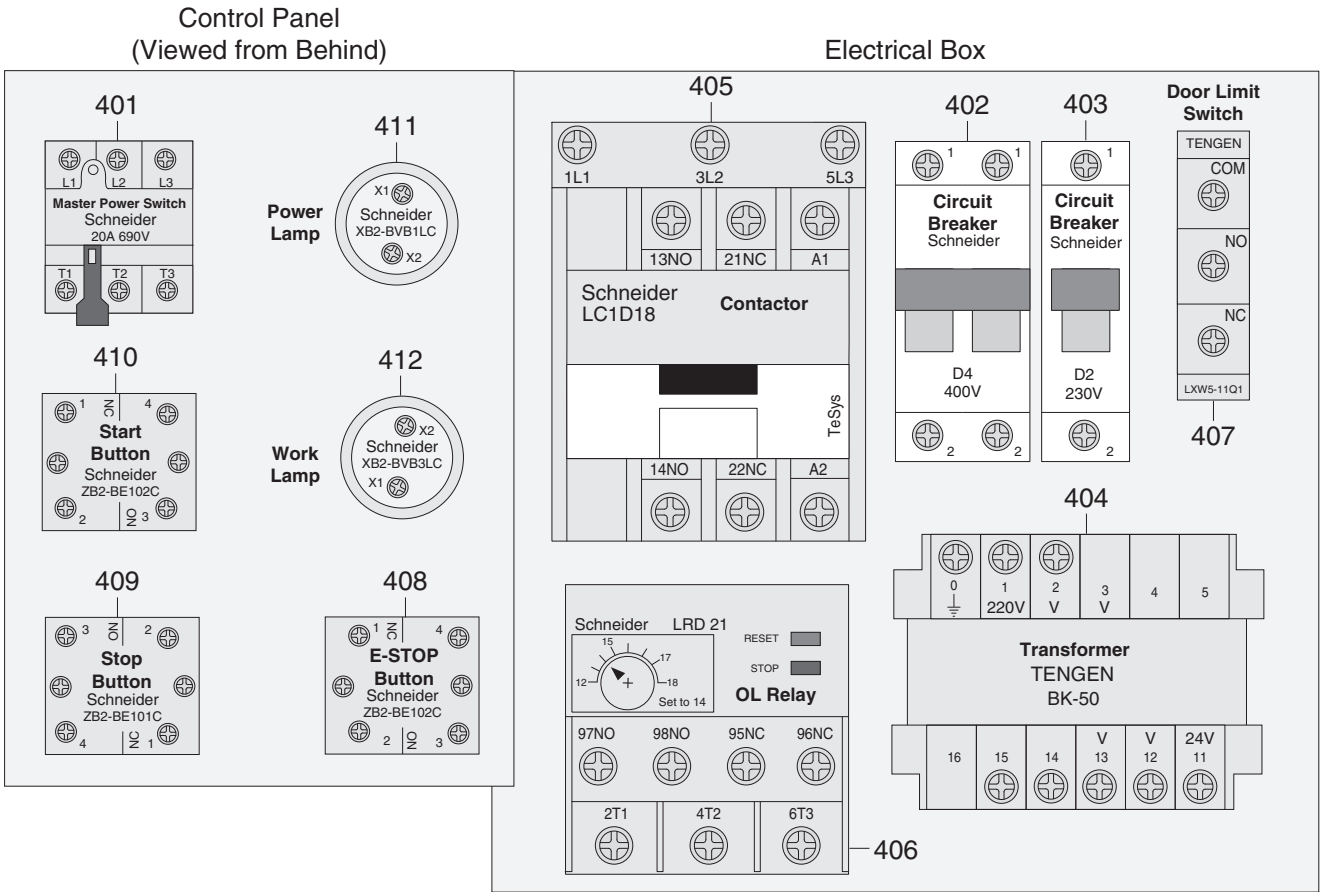

REF	PART #	DESCRIPTION
401	PT1242401	MASTER POWER SWITCH SCHNEIDER 20A
402	PT1242402	CIRCUIT BREAKER SCHNEIDER D4 400V
403	PT1242403	CIRCUIT BREAKER SCHNEIDER D2 230V
404	PT1242404	TRANSFORMER TENGEN BK-50
405	PT1242405	CONTACTOR SCHNEIDER LC1D18 220V
406	PT1242406	OL RELAY SCHNEIDER LRD21 12-18A

REF	PART #	DESCRIPTION
407	PT1242407	LIMIT SWITCH TENGEN LXW5-11Q1
408	PT1242408	E-STOP SWITCH SCHNEIDER ZB2-BE102C
409	PT1242409	STOP BUTTON SCHNEIDER ZB2-BE101C
410	PT1242410	START BUTTON SCHNEIDER ZB2-BE102C
411	PT1242411	POWER LAMP SCHNEIDER XB2-BVB1LC
412	PT1242412	WORK LAMP SCHNEIDER XB2-BVB3LC

Labels & Cosmetics

REF	PART #	DESCRIPTION
501	PT1242501	READ MANUAL WARNING
502	PT1242502	EYE INJURY HAZARD
503	PT1242503	MODEL NUMBER LABEL
504	PT1242504	PINCH HAZARD
505	PT1242505	INJURY/SHOCK HAZARD
506	PT1242506	ELECTRICAL LABEL

REF	PART #	DESCRIPTION
507	PT1242507	CHECK OIL HANGING TAG
508	PT1242508	NOTICE LABEL
509	PT1242509	FLUID CAPACITIES LABEL
510	PT1242510	GRIZZLY.COM LABEL
511	PT1242511	MACHINE ID LABEL
512	PT1242512	TOUCH-UP PAINT, GRIZZLY BEIGE

⚠WARNING

Safety labels help reduce the risk of serious injury caused by machine hazards. If any label comes off or becomes unreadable, the owner of this machine MUST replace it in the original location before resuming operations. For replacements, contact (800) 523-4777 or www.grizzly.com.

Grizzly Industrial, Inc. WARRANTY CARD

Name _____

Street _____

City _____ State _____ Zip _____

Phone # _____ Email _____

Model # _____ Order # _____ Serial # _____

The following information is given on a voluntary basis. It will be used for marketing purposes to help us develop better products and services. ***Of course, all information is strictly confidential.***

1. How did you learn about us?

____ Advertisement ____ Friend ____ Catalog
____ Card Deck ____ Website ____ Other:

2. Which of the following magazines do you subscribe to?

____ Cabinetmaker & FDM
____ Family Handyman
____ Hand Loader
____ Handy
____ Home Shop Machinist
____ Journal of Light Cont.
____ Live Steam
____ Model Airplane News
____ Old House Journal
____ Popular Mechanics
____ Popular Science
____ Popular Woodworking
____ Precision Shooter
____ Projects in Metal
____ RC Modeler
____ Rifle
____ Shop Notes
____ Shotgun News
____ Today's Homeowner
____ Wood
____ Wooden Boat
____ Woodshop News
____ Woodsmith
____ Woodwork
____ Woodworker West
____ Woodworker's Journal
____ Other:

3. What is your annual household income?

____ $20,000-$29,000 ____ $30,000-$39,000 ____ $40,000-$49,000
____ $50,000-$59,000 ____ $60,000-$69,000 ____ $70,000+

4. What is your age group?

____ 20-29 ____ 30-39 ____ 40-49
____ 50-59 ____ 60-69 ____ 70+

5. How long have you been a woodworker/metalworker?

____ 0-2 Years ____ 2-8 Years ____ 8-20 Years ____ 20+ Years

6. How many of your machines or tools are Grizzly?

____ 0-2 ____ 3-5 ____ 6-9 ____ 10+

7. Do you think your machine represents a good value? _____Yes _____No

8. Would you recommend Grizzly Industrial to a friend? _____Yes _____No

9. Would you allow us to use your name as a reference for Grizzly customers in your area?
Note: *We never use names more than 3 times.* _____Yes _____No

10. Comments: _____

_____

_____

_____

CUT ALONG DOTTED LINE

FOLD ALONG DOTTED LINE

Place
Stamp
Here

GRIZZLY INDUSTRIAL, INC.
P.O. BOX 2069
BELLINGHAM, WA 98227-2069

FOLD ALONG DOTTED LINE

Send a Grizzly Catalog to a friend:

Name_____

Street_____

City_____State_____Zip_____

TAPE ALONG EDGES--PLEASE DO NOT STAPLE

WARRANTY & RETURNS

Grizzly Industrial, Inc. warrants every product it sells for a period of **1 year** to the original purchaser from the date of purchase. This warranty does not apply to defects due directly or indirectly to misuse, abuse, negligence, accidents, repairs or alterations or lack of maintenance. This is Grizzly's sole written warranty and any and all warranties that may be implied by law, including any merchantability or fitness, for any particular purpose, are hereby limited to the duration of this written warranty. We do not warrant or represent that the merchandise complies with the provisions of any law or acts unless the manufacturer so warrants. In no event shall Grizzly's liability under this warranty exceed the purchase price paid for the product and any legal actions brought against Grizzly shall be tried in the State of Washington, County of Whatcom.

We shall in no event be liable for death, injuries to persons or property or for incidental, contingent, special, or consequential damages arising from the use of our products.

To take advantage of this warranty, contact us by mail or phone and give us all the details. We will then issue you a "Return Number,'' which must be clearly posted on the outside as well as the inside of the carton. We will not accept any item back without this number. Proof of purchase must accompany the merchandise.

The manufacturers reserve the right to change specifications at any time because they constantly strive to achieve better quality equipment. We make every effort to ensure that our products meet high quality and durability standards and we hope you never need to use this warranty.

Please feel free to write or call us if you have any questions about the machine or the manual.

Thank you again for your business and continued support. We hope to serve you again soon.