Headstock Cover

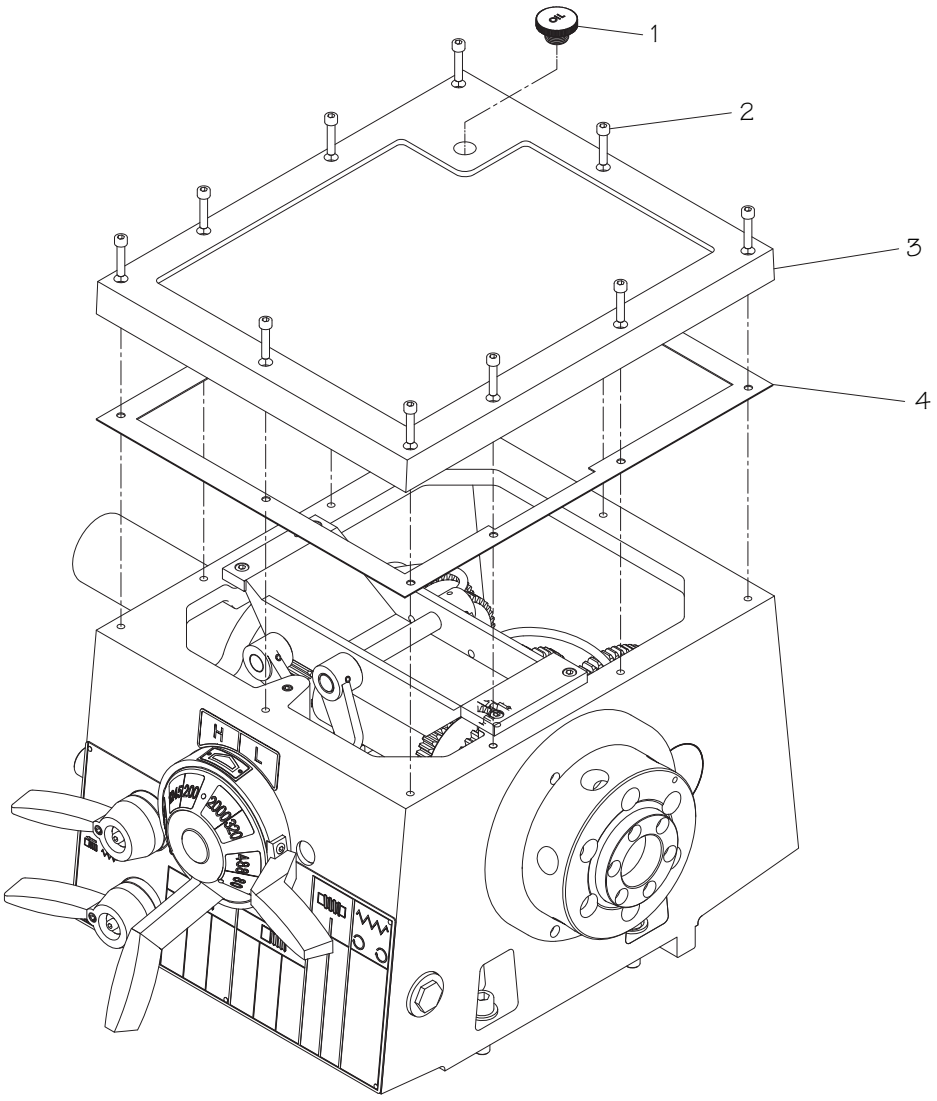

REF	PART #	DESCRIPTION
1	PSB10490001	HEADSTOCK OIL FILL CAP
2	PSB10490002	CAP SCREW M6-1 X 40

REF	PART #	DESCRIPTION
3	PSB10490003	HEADSTOCK TOP COVER
4	PSB10490004	TOP COVER GASKET

Headstock Controls

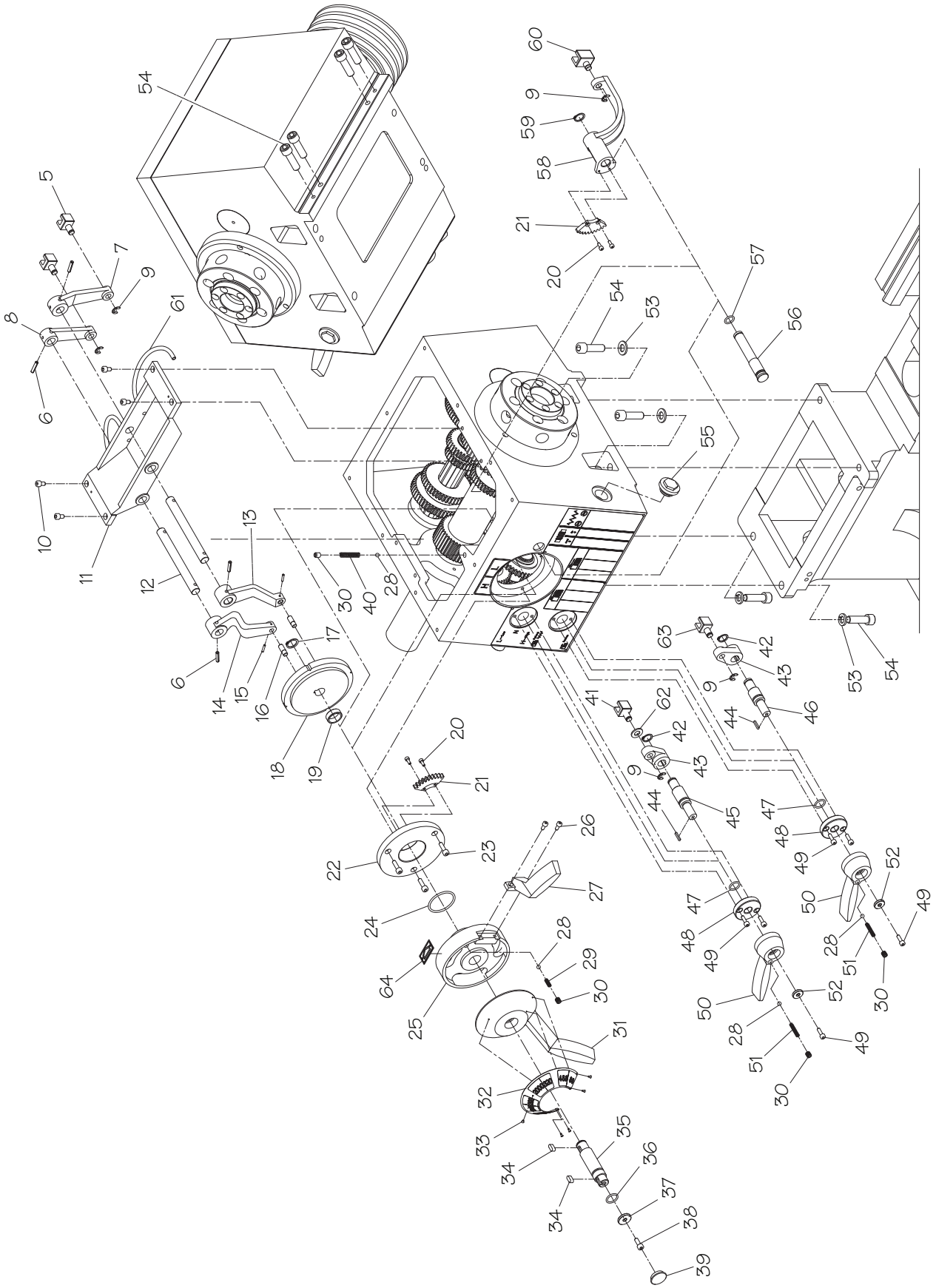

Headstock Controls Parts List

REF	PART #	DESCRIPTION
5	PSB10490005	SHIFT FORK
6	PSB10490006	ROLL PIN 5 X 24
7	PSB10490007	RIGHT REAR SHIFT LEVER
8	PSB10490008	LEFT REAR SHIFT LEVER
9	PSB10490009	E-CLIP 8MM
10	PSB10490010	CAP SCREW M6-1 X 10
11	PSB10490011	SHIFT LEVER FRAME
12	PSB10490012	SHIFT LEVER ROD
13	PSB10490013	RIGHT FRONT SHIFT LEVER
14	PSB10490014	LEFT FRONT SHIFT LEVER
15	PSB10490015	ROLL PIN 3 X 16
16	PSB10490016	STEP PIN
17	PSB10490017	EXT RETAINING RING 18MM
18	PSB10490018	SHIFT CAM
19	PSB10490019	SPACER
20	PSB10490020	CAP SCREW M4-.7 X 10
21	PSB10490021	GEAR 40T
22	PSB10490022	SELECTOR BRACKET
23	PSB10490023	CAP SCREW M6-1 X 20
24	PSB10490024	O-RING 43.7 X 3.5 P44
25	PSB10490025	SPEED RANGE SELECTOR
26	PSB10490026	CAP SCREW M5-.8 X 10
27	PSB10490027	SPEED RANGE HANDLE
28	PSB10490028	STEEL BALL 1/4
29	PSB10490029	COMPRESSION SPRING
30	PSB10490030	SET SCREW M8-1.25 X 8
31	PSB10490031	SPEED SELECTOR
32	PSB10490032	SPEED SELECTOR LABEL PLATE
33	PSB10490033	STEEL FLUTED RIVET 2 X 5MM
34	PSB10490034	KEY 6 X 6 X 14

REF	PART #	DESCRIPTION
35	PSB10490035	SHAFT
36	PSB10490036	O-RING 17.8 X 2.4 P18
37	PSB10490037	SHAFT FLAT WASHER 6MM
38	PSB10490038	CAP SCREW M6-1 X 16
39	PSB10490039	SHAFT END PLUG
40	PSB10490040	COMPRESSION SPRING
41	PSB10490041	FEED RANGE SHIFT FORK
42	PSB10490042	EXT RETAINING RING 15MM
43	PSB10490043	ROCKER ARM
44	PSB10490044	KEY 3 X 3 X 18
45	PSB10490045	FEED RANGE SHAFT
46	PSB10490046	FEED DIRECTION SHAFT
47	PSB10490047	O-RING 15.8 X 2.4 P16
48	PSB10490048	LEVER BRACKET
49	PSB10490049	CAP SCREW M5-.8 X 15
50	PSB10490050	LEVER
51	PSB10490051	COMPRESSION SPRING
52	PSB10490052	LEVER FLAT WASHER 5MM
53	PSB10490053	LOCK WASHER 12MM
54	PSB10490054	CAP SCREW M12-1.75 X 40
55	PSB10490055	OIL SIGHT GLASS 3/4"
56	PSB10490056	SHAFT
57	PSB10490057	O-RING 13.8 X 2.4 P14
58	PSB10490058	SWING SHIFT LEVER
59	PSB10490059	EXT RETAINING RING 16MM
60	PSB10490060	SHIFT FORK
61	PSB10490061	OIL TUBE 6 X 270MM
62	PSB10490062	FLAT WASHER 10MM
63	PSB10490063	FEED DIRECTION SHIFT FORK
64	PSB10490064	SPEED RANGE INDICATOR

Headstock Internal Gears

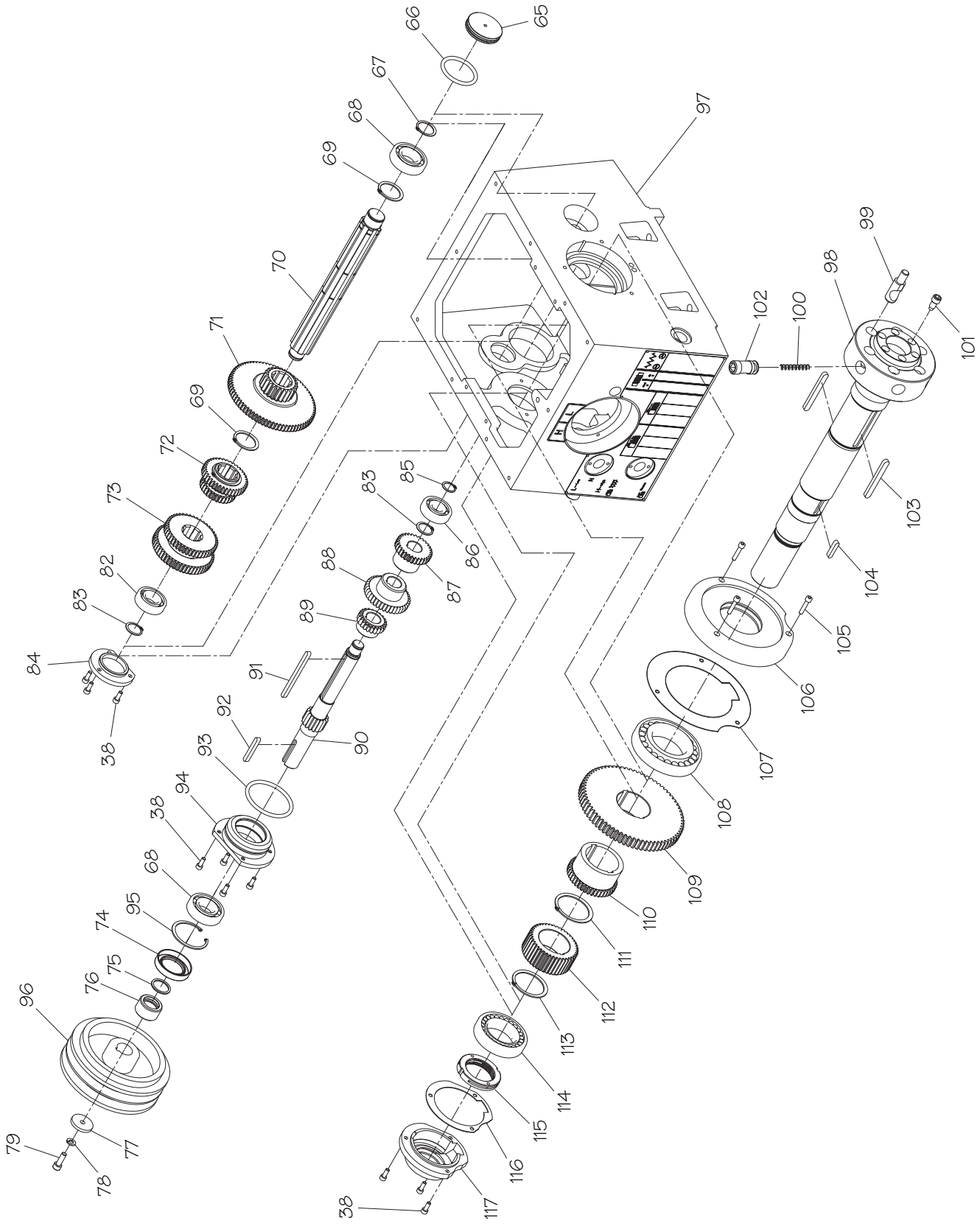

Headstock Internal Gears Parts List

REF	PART #	DESCRIPTION
38	PSB10490038	CAP SCREW M6-1 X 16
65	PSB10490065	CASTING PLUG
66	PSB10490066	O-RING 54.6 X 5.7 P55
67	PSB10490067	EXT RETAINING RING 30MM
68	PSB10490068	BALL BEARING 6206 OPEN
69	PSB10490069	EXT RETAINING RING 38MM
70	PSB10490070	SPLINE SHAFT
71	PSB10490071	COMBO GEAR ASSEMBLY 22T/76T
72	PSB10490072	COMBO GEAR ASSEMBLY 30T/38T
73	PSB10490073	COMBO GEAR ASSEMBLY 45T/52T
74	PSB10490074	OIL SEAL 40 X 62 X 12
75	PSB10490075	O-RING 27.7 X 3.5 P28
76	PSB10490076	SPACER
77	PSB10490077	PULLEY FLAT WASHER 8MM
78	PSB10490078	LOCK WASHER 8MM
79	PSB10490079	CAP SCREW M8-1.25 X 25
82	PSB10490082	BALL BEARING 6205 OPEN
83	PSB10490083	EXT RETAINING RING 25MM
84	PSB10490084	FLANGE COVER
85	PSB10490085	EXT RETAINING RING 20MM
86	PSB10490086	BALL BEARING 6304 OPEN
87	PSB10490087	GEAR 30T
88	PSB10490088	GEAR 38T
89	PSB10490089	GEAR 22T
90	PSB10490090	GEAR SHAFT 16T
91	PSB10490091	KEY 7 X 7 X 104

REF	PART #	DESCRIPTION
92	PSB10490092	KEY 7 X 7 X 53
93	PSB10490093	O-RING 74.6 X 5.7 P75
94	PSB10490094	FLANGE BEARING
95	PSB10490095	INT RETAINING RING 62MM
96	PSB10490096	SPINDLE PULLEY
97	PSB10490097	HEADSTOCK HOUSING
98	PSB10490098	SPINDLE
99	PSB10490099	CAMLOCK STUD
100	PSB10490100	CAM SPRING
101	PSB10490101	CAMLOCK CAP SCREW
102	PSB10490102	CAMLOCK
103	PSB10490103	KEY 10 X 6 X 85
104	PSB10490104	KEY 7 X 7 X 35
105	PSB10490105	CAP SCREW M6-1 X 30
106	PSB10490106	BEARING COVER
107	PSB10490107	BEARING COVER GASKET
108	PSB10490108	TAPERED ROLLER BEARING 30213 NTN
109	PSB10490109	GEAR 72T
110	PSB10490110	GEAR 41T
111	PSB10490111	EXT RETAINING RING 60MM
112	PSB10490112	GEAR 42T
113	PSB10490113	EXT RETAINING RING 56MM
114	PSB10490114	TAPERED ROLLER BEARING 32011 NTN
115	PSB10490115	SPANNER NUT
116	PSB10490116	COVER GASKET
117	PSB10490117	OUTBOARD SPINDLE COVER

Headstock Transfer Gears

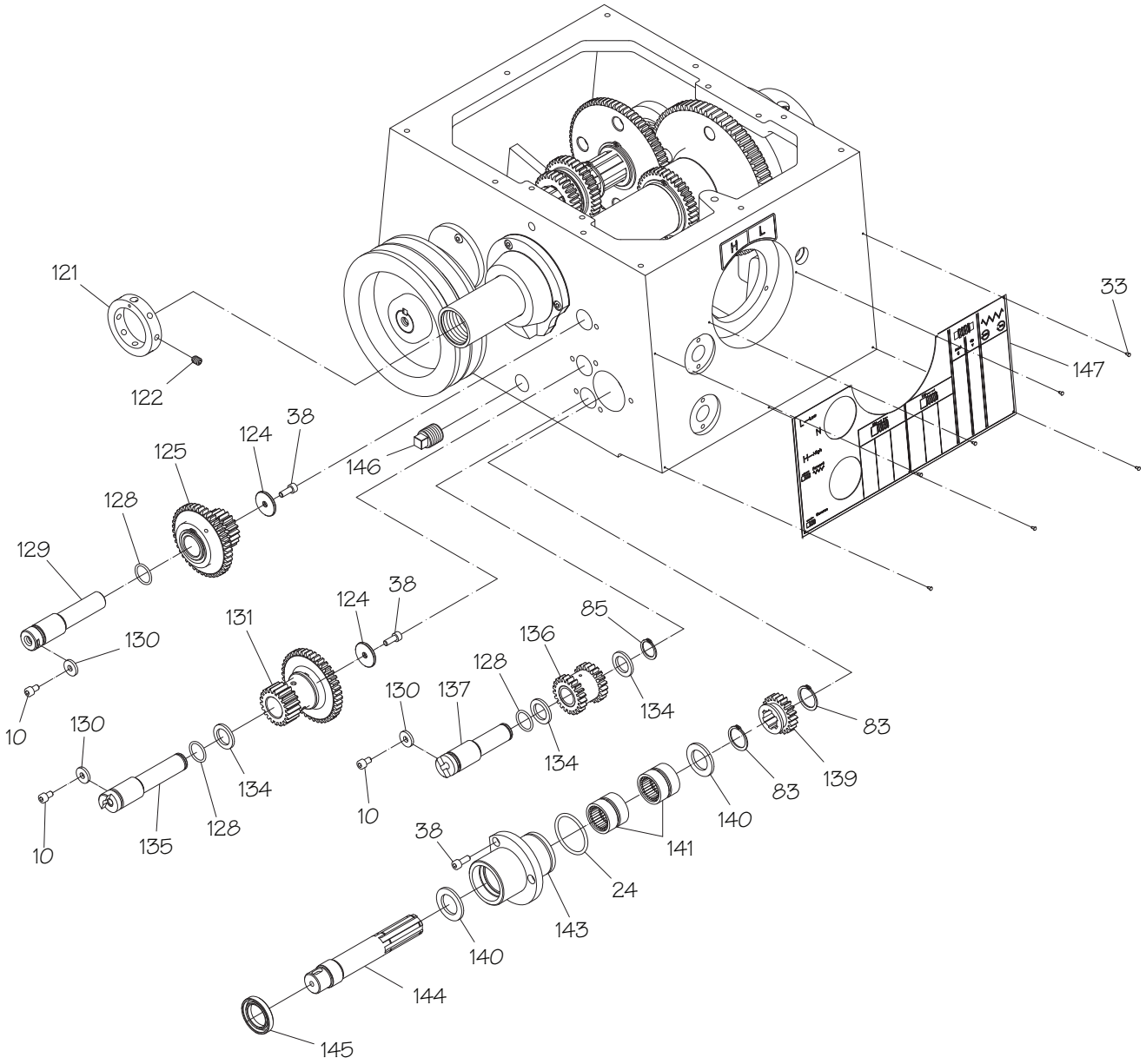

REF	PART #	DESCRIPTION
10	PSB10490010	CAP SCREW M6-1 X 10
24	PSB10490024	O-RING 43.7 X 3.5 P44
33	PSB10490033	STEEL FLUTED RIVET 2 X 5MM
38	PSB10490038	CAP SCREW M6-1 X 16
83	PSB10490083	EXT RETAINING RING 25MM
85	PSB10490085	EXT RETAINING RING 20MM
121	PSB10490121	SPEED SENSOR RING
122	PSB10490122	SET SCREW M10-1.5 X 10
124	PSB10490124	GEAR FLAT WASHER 6MM
125	PSB10490125	COMBO GEAR ASSY 21T/42T
128	PSB10490128	O-RING 20.8 X 2.4 P21
129	PSB10490129	SHAFT
130	PSB10490130	SHAFT FLAT WASHER 6MM

REF	PART #	DESCRIPTION
131	PSB10490131	COMBO GEAR ASSY 21T/42T
134	PSB10490134	SPACER
135	PSB10490135	SHAFT
136	PSB10490136	GEAR 21T
137	PSB10490137	SHAFT
139	PSB10490139	GEAR 21T
140	PSB10490140	SPACER
141	PSB10490141	NEEDLE BEARING RNA-6904
143	PSB10490143	BEARING HOUSING
144	PSB10490144	SPLINE SHAFT
145	PSB10490145	OIL SEAL 28 X 44 X 7MM
146	PSB10490146	PIPE PLUG 1/2"
147	PSB10490147	HEADSTOCK FRONT PANEL

Gearbox Gears

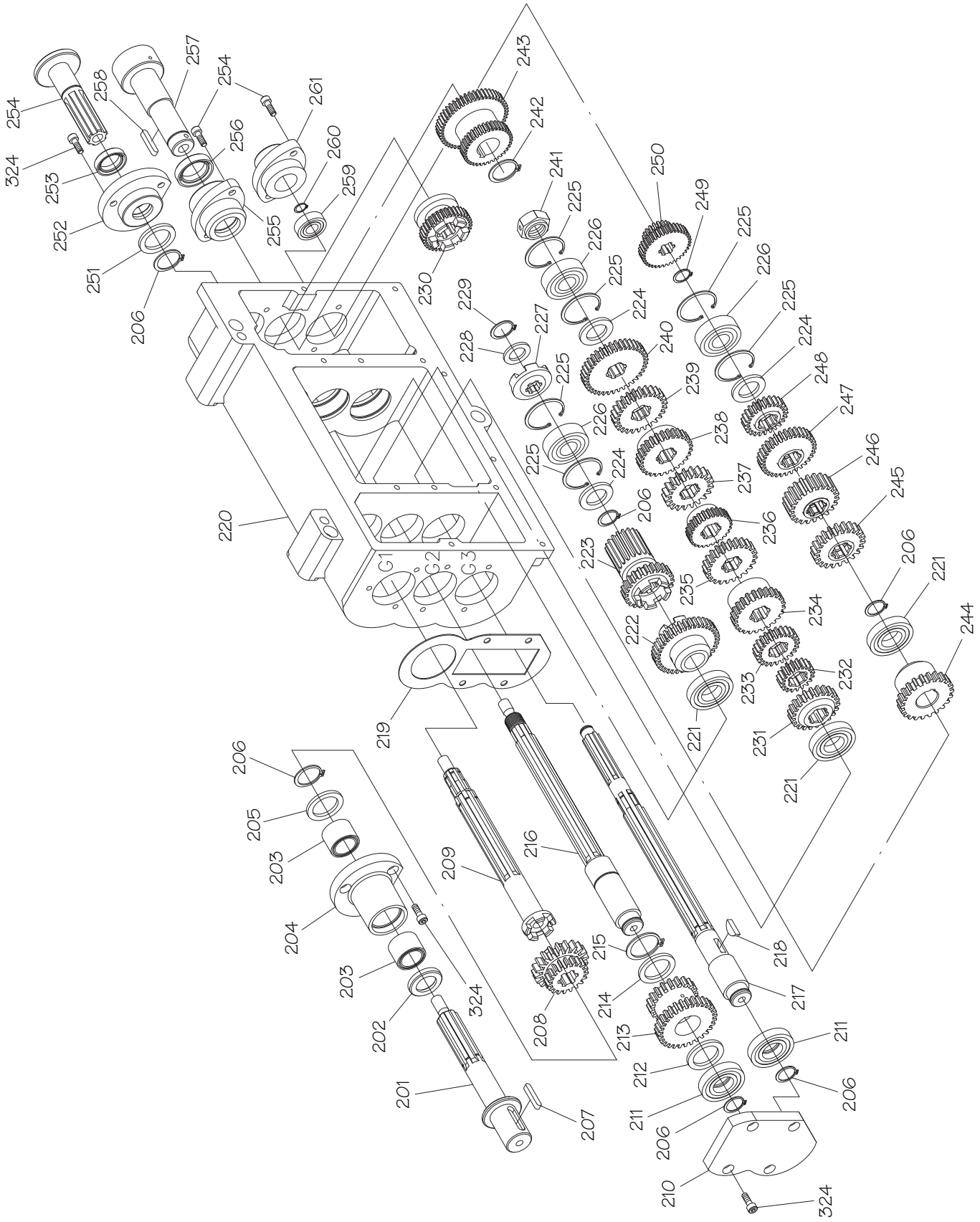

Gearbox Gears Parts List

REF	PART #	DESCRIPTION
201	PSB10490201	SPLINE SHAFT
202	PSB10490202	OIL SEAL 20 X 32 X 5MM
203	PSB10490203	NEEDLE ROLLER BEARING TAF202820
204	PSB10490204	FLANGE BEARING
205	PSB10490205	SPACER
206	PSB10490206	EXT RETAINING RING 20MM
207	PSB10490207	KEY 7 X 7 X 35
208	PSB10490208	COMBO GEAR 19T/20T
209	PSB10490209	SPLINE SHAFT
210	PSB10490210	SIDE COVER
211	PSB10490211	BALL BEARING 16004 OPEN
212	PSB10490212	SPACER
213	PSB10490213	GEAR 19T/30T
214	PSB10490214	SPACER
215	PSB10490215	EXT RETAINING RING 25MM
216	PSB10490216	SPLINE SHAFT
217	PSB10490217	SPLINE SHAFT
218	PSB10490218	WOODRUFF KEY 5 X 19
219	PSB10490219	SIDE COVER GASKET
220	PSB10490220	GEARBOX HOUSING
221	PSB10490221	BALL BEARING 16004 OPEN
222	PSB10490222	GEAR 38T
223	PSB10490223	GEAR 23T/19T
224	PSB10490224	SPACER
225	PSB10490225	INT RETAINING RING 40MM
226	PSB10490226	BALL BEARING 6203 OPEN
227	PSB10490227	CLUTCH
228	PSB10490228	SPACER
229	PSB10490229	EXT RETAINING RING 16MM
230	PSB10490230	GEAR 35T
231	PSB10490231	GEAR 22T

REF	PART #	DESCRIPTION
232	PSB10490232	GEAR 19T
233	PSB10490233	GEAR 20T
234	PSB10490234	GEAR 24T
235	PSB10490235	GEAR 23T
236	PSB10490236	GEAR 27T
237	PSB10490237	GEAR 24T
238	PSB10490238	GEAR 28T
239	PSB10490239	GEAR 26T
240	PSB10490240	GEAR 38T
241	PSB10490241	SPANNER NUT
242	PSB10490242	EXT RETAINING RING 22MM
243	PSB10490243	COMBO GEAR 36T/50T
244	PSB10490244	GEAR 22T
245	PSB10490245	GEAR 22T
246	PSB10490246	GEAR 22T
247	PSB10490247	GEAR 33T
248	PSB10490248	GEAR 22T
249	PSB10490249	EXT RETAINING RING 17MM
250	PSB10490250	COMBO GEAR 20T/36T
251	PSB10490251	SPACER
252	PSB10490252	FLANGE BEARING
253	PSB10490253	OIL SEAL 20 X 32 X 5MM
254	PSB10490254	SPLINE SHAFT
255	PSB10490255	FLANGE BEARING
256	PSB10490256	OIL SEAL 24 X 35 X 8
257	PSB10490257	SHAFT
258	PSB10490258	KEY 5 X 5 X 35
259	PSB10490259	BALL BEARING 6001 OPEN
260	PSB10490260	EXT RETAINING RING 12MM
261	PSB10490261	FLANGE BEARING
324	PSB10490324	CAP SCREW M6-1 X 12

Gearbox Controls

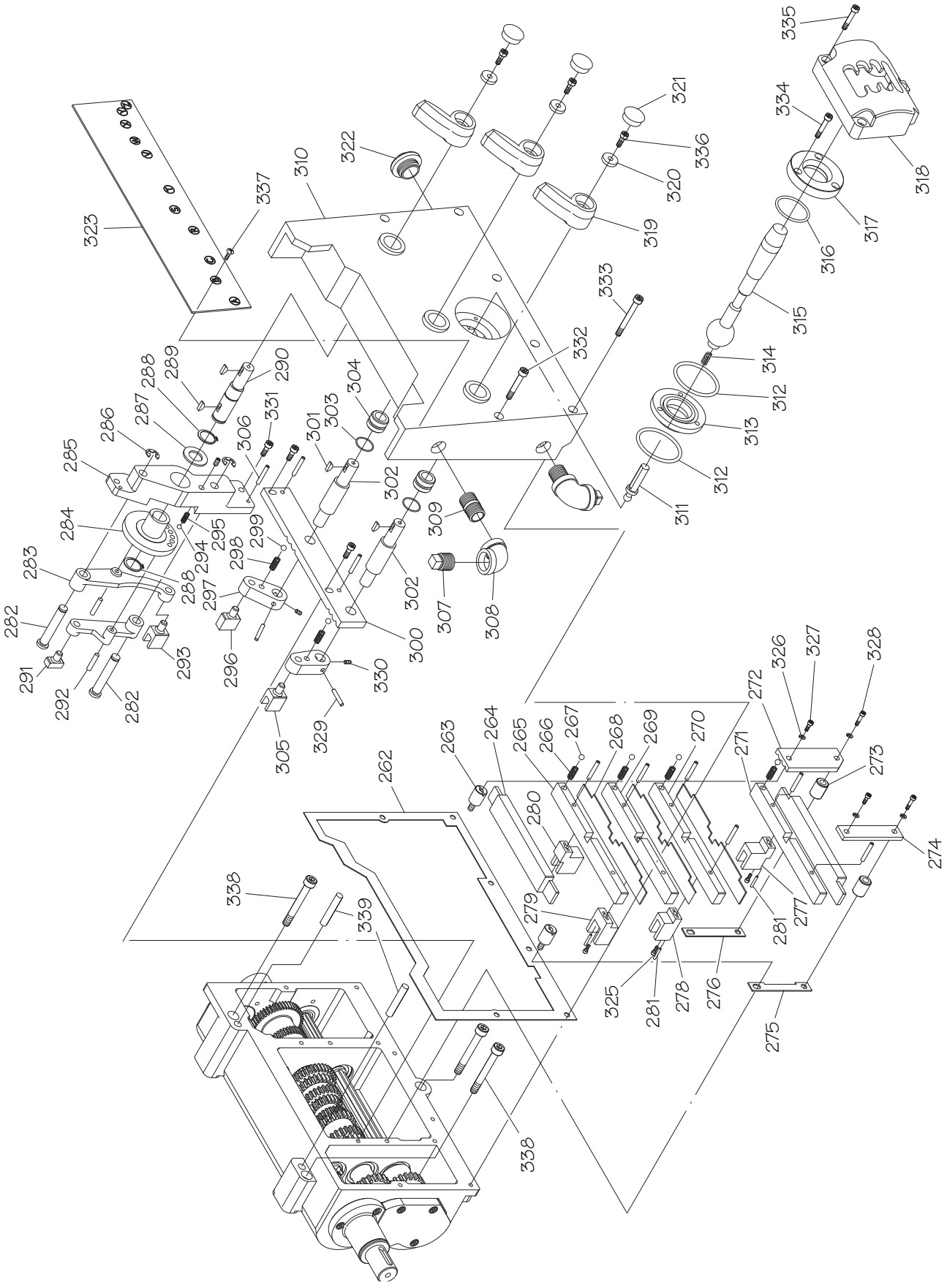

Gearbox Controls Parts List

REF	PART #	DESCRIPTION
262	PSB10490262	GEARBOX FRONT COVER GASKET
263	PSB10490263	PARTITION SCREW
264	PSB10490264	UPPER PARTITION SUPPORT
265	PSB10490265	UPPER FORK SUPPORT
266	PSB10490266	COMPRESSION SPRING 4 X 19
267	PSB10490267	STEEL BALL 1/4
268	PSB10490268	PARTITION PLATE
269	PSB10490269	UPPER MIDDLE PARTITION SUPPORT
270	PSB10490270	LOWER MIDDLE PARTITION SUPPORT
271	PSB10490271	LOWER PARTITION SUPPORT
272	PSB10490272	REVERSE-STOP PLATE
273	PSB10490273	SPACER
274	PSB10490274	SHOULDER PLATE
275	PSB10490275	INDENTED ALIGNMENT PLATE
276	PSB10490276	ALIGNMENT PLATE
277	PSB10490277	SHIFT FORK
278	PSB10490278	SHIFT FORK
279	PSB10490279	SHIFT FORK
280	PSB10490280	SHIFT FORK
281	PSB10490281	ROLL PIN 3 X 16
282	PSB10490282	CAPTIVE PIN
283	PSB10490283	ROCKER ARM
284	PSB10490284	SHIFT CAM
285	PSB10490285	CAM BRACKET
286	PSB10490286	E-CLIP 8MM
287	PSB10490287	SPACER
288	PSB10490288	EXT RETAINING RING 17MM
289	PSB10490289	WOODRUFF KEY 4 X 13
290	PSB10490290	SHAFT
291	PSB10490291	SHIFT PAD
292	PSB10490292	DOWEL PIN 5 X 25
293	PSB10490293	SHIFT FORK
294	PSB10490294	STEEL BALL 1/4
295	PSB10490295	COMPRESSION SPRING 4 X 19
296	PSB10490296	SHIFT PAD
297	PSB10490297	PIVOT ARM
298	PSB10490298	COMPRESSION SPRING 6 X 13
299	PSB10490299	STEEL BALL 1/4
300	PSB10490300	SELECTOR BAR

REF	PART #	DESCRIPTION
301	PSB10490301	WOODRUF KEY 4 X 13
302	PSB10490302	SHAFT
303	PSB10490303	O-RING 17.8 X 2.4 P18
304	PSB10490304	BUSHING
305	PSB10490305	SHIFT FORK
306	PSB10490306	ROLL PIN 5 X 16
307	PSB10490307	PIPE PLUG 1/2"PT
308	PSB10490308	PIPE ELBOW 1/2"PT
309	PSB10490309	PIPE NIPPLE 1/2" X 1"
310	PSB10490310	GEARBOX FRONT COVER
311	PSB10490311	SELECTOR SHAFT
312	PSB10490312	O-RING 39.4 X 3.1 G40
313	PSB10490313	SELECTOR LEVER SUPPORT
314	PSB10490314	COMPRESSION SPRING 9 X 38
315	PSB10490315	SELECTOR LEVER
316	PSB10490316	O-RING 3.1 X 29.4 G30
317	PSB10490317	SELECTOR LEVER COVER
318	PSB10490318	SELECTOR FRAME
319	PSB10490319	SHIFT LEVER
320	PSB10490320	LEVER FLAT WASHER 5MM
321	PSB10490321	LEVER END CAP
322	PSB10490322	OIL SIGHT GLASS 3/4"
323	PSB10490323	GEARBOX FRONT PANEL
325	PSB10490325	CAP SCREW M5-.8 X 20
326	PSB10490326	LOCK WASHER 6MM
327	PSB10490327	CAP SCREW M6-1 X 12
328	PSB10490328	CAP SCREW M6-1 X 35
329	PSB10490329	ROLL PIN 4 X 24
330	PSB10490330	SET SCREW M6-1 X 8
331	PSB10490331	CAP SCREW M6-1 X 20
332	PSB10490332	CAP SCREW M6-1 X 70
333	PSB10490333	CAP SCREW M6-1 X 80
334	PSB10490334	CAP SCREW M5-.8 X 25
335	PSB10490335	CAP SCREW M6-1 X 12
336	PSB10490336	CAP SCREW M5-.8 X 12
337	PSB10490337	PHLP HD SCR M4-.7 X 6
338	PSB10490338	CAP SCREW M8-1.25 X 65
339	PSB10490339	TAPER PIN #7 X 3-1/4"

Apron Front View

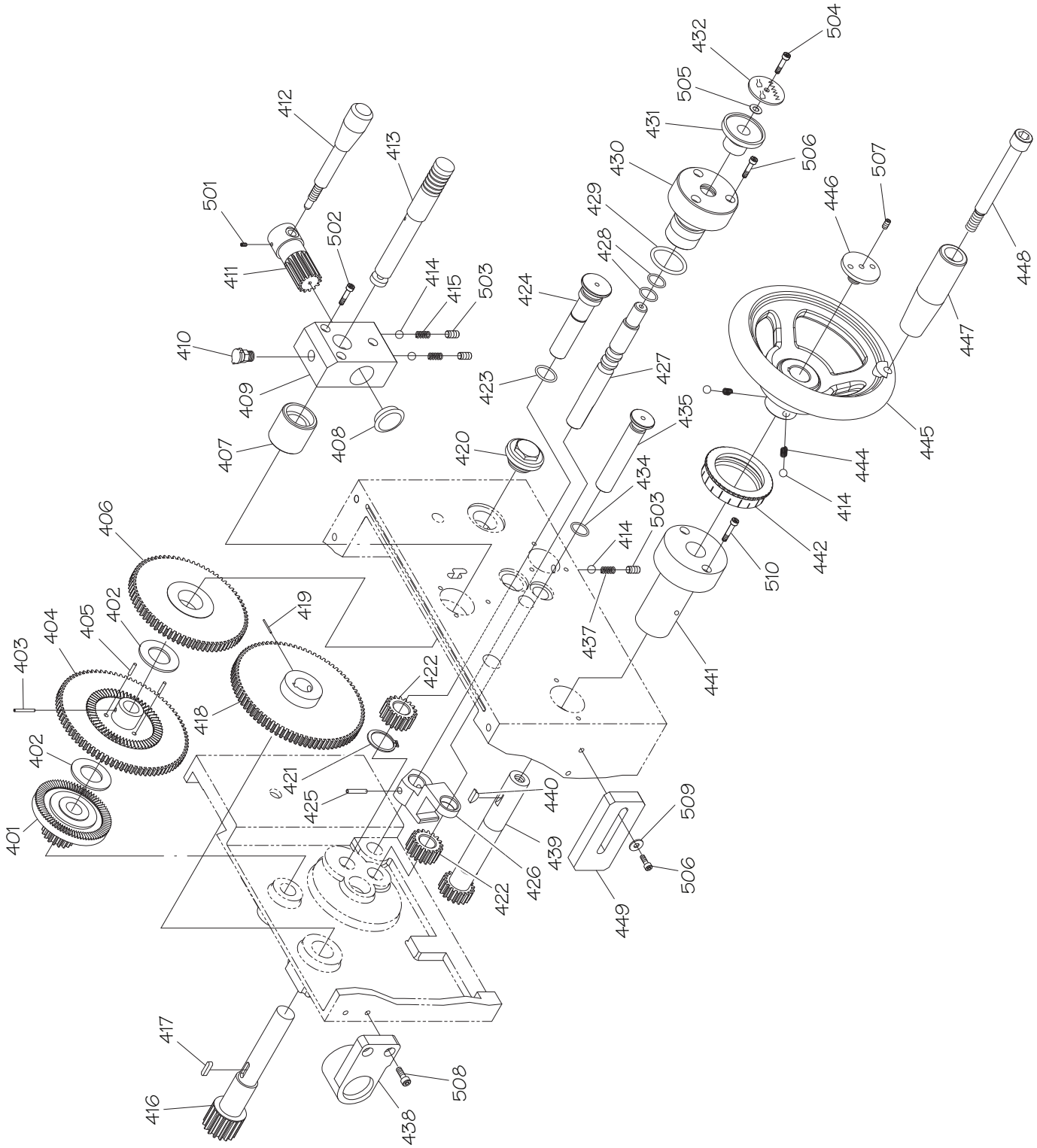

Apron Front View Parts List

REF	PART #	DESCRIPTION
401	PSB10490401	COMBO GEAR 18T/60T
402	PSB10490402	THRUST WASHER AS3047
403	PSB10490403	ROLL PIN 4 X 22
404	PSB10490404	COMBO GEAR 60T/81T
405	PSB10490405	DOWEL PIN 4 X 17
406	PSB10490406	COMBO GEAR 60T/72T
407	PSB10490407	SPACER
408	PSB10490408	CASTING PLUG
409	PSB10490409	GEAR BRACKET
410	PSB10490410	OIL CAP
411	PSB10490411	CAM SHAFT
412	PSB10490412	LEVER
413	PSB10490413	SHAFT
414	PSB10490414	STEEL BALL 1/4
415	PSB10490415	COMPRESSION SPRING 6 X 13
416	PSB10490416	GEAR SHAFT 16T
417	PSB10490417	KEY 5 X 5 X 18
418	PSB10490418	GEAR 81T
419	PSB10490419	ROLL PIN 5 X 36
420	PSB10490420	OIL SIGHT GLASS 3/4"
421	PSB10490421	EXT RETAINING RING 16MM
422	PSB10490422	GEAR 18T
423	PSB10490423	O-RING 17.8 X 2.4 P18
424	PSB10490424	SHAFT
425	PSB10490425	ROLL PIN 4 X 24
426	PSB10490426	FEED SELECTOR PIVOT ARM
427	PSB10490427	SHAFT
428	PSB10490428	O-RING 15.8 X 2.4 P16

REF	PART #	DESCRIPTION
429	PSB10490429	O-RING 25.7 X 3.5 P26
430	PSB10490430	SHAFT BRACKET
431	PSB10490431	FEED SELECTOR KNOB
432	PSB10490432	SELECTOR INDICATOR PLATE
434	PSB10490434	O-RING 11.8 X 2.4 P12
435	PSB10490435	SHAFT
437	PSB10490437	COMPRESSION SPRING 4 X 19
438	PSB10490438	LEADSCREW SUPPORT
439	PSB10490439	GEAR SHAFT 18T
440	PSB10490440	WOODRUFF KEY 5 X 19
441	PSB10490441	SHAFT BRACKET
442	PSB10490442	GRADUATED DIAL
444	PSB10490444	COMPRESSION SPRING
445	PSB10490445	HANDWHEEL
446	PSB10490446	HANDWHEEL END CAP
447	PSB10490447	HANDWHEEL HANDLE
448	PSB10490448	HANDLE CAP SCREW
449	PSB10490449	CARRIAGE STOP PLATE
501	PSB10490501	SET SCREW M5-.8 X 6
502	PSB10490502	CAP SCREW M5-.8 X 35
503	PSB10490503	SET SCREW M8-1.25 X 8
504	PSB10490504	PHLP HD SCR M5-.8 X 12
505	PSB10490505	FLAT WASHER 6MM
506	PSB10490506	CAP SCREW M6-1 X 25
507	PSB10490507	SET SCREW M6-1 X 25
508	PSB10490508	CAP SCREW M6-1 X 16
509	PSB10490509	FLAT WASHER 6MM
510	PSB10490510	CAP SCREW M5-.8 X 25

Apron Rear View

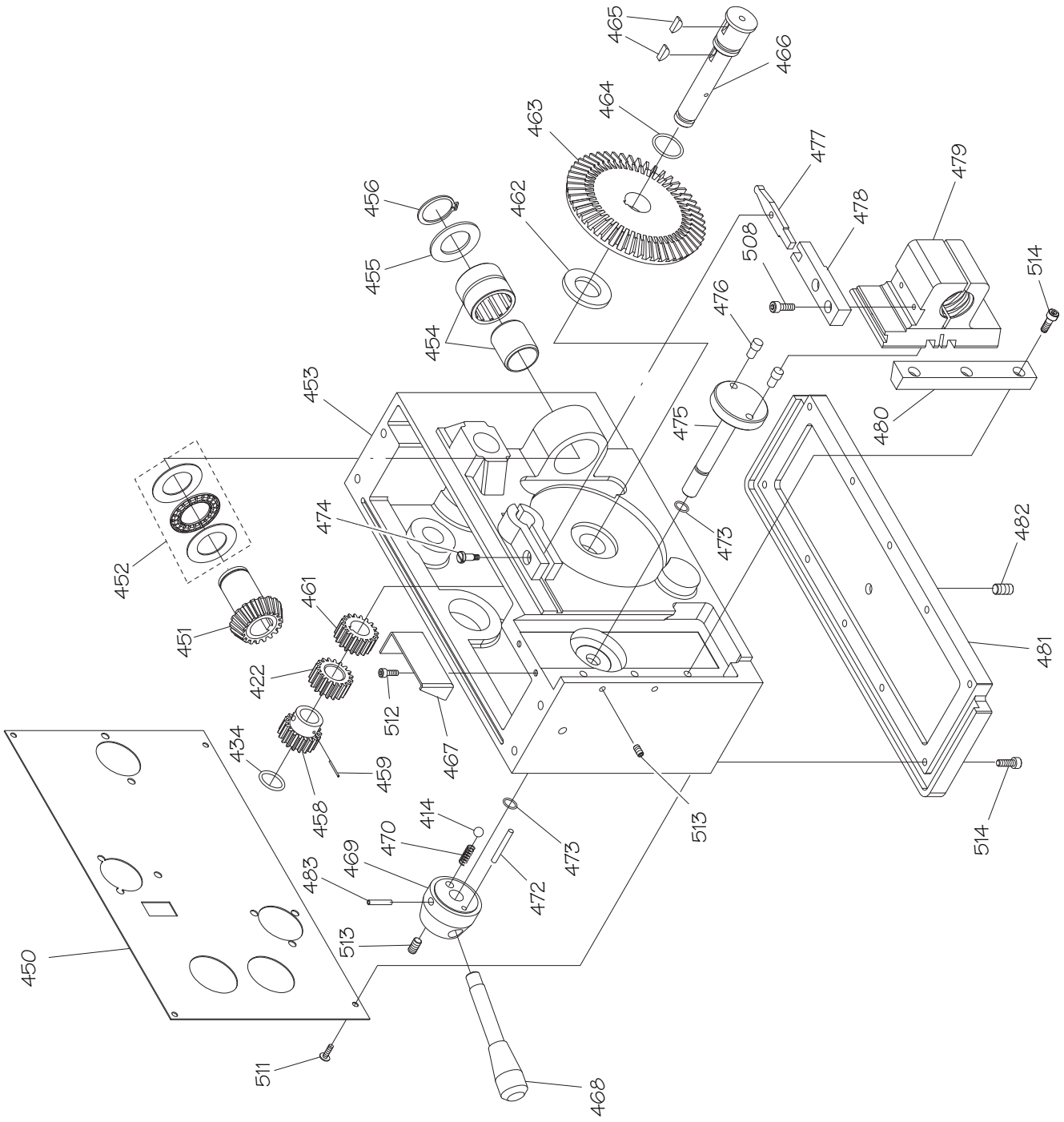

Apron Rear View Parts List

REF	PART #	DESCRIPTION
414	PSB10490414	STEEL BALL 1/4
422	PSB10490422	GEAR 18T
434	PSB10490434	O-RING 11.8 X 2.4 P12
450	PSB10490450	APRON PANEL
451	PSB10490451	BEVEL GEAR 23T
452	PSB10490452	THRUST BEARING NTB/AS-2542
453	PSB10490453	APRON
454	PSB10490454	NEEDLE ROLLER BEARING NK29/30
455	PSB10490455	SPACER
456	PSB10490456	EXT RETAINING RING 25MM
458	PSB10490458	GEAR 18T
459	PSB10490459	ROLL PIN 5 X 22
461	PSB10490461	GEAR 18T
462	PSB10490462	SPACER
463	PSB10490463	BEVEL GEAR
464	PSB10490464	SPACER
465	PSB10490465	WOODRUFF KEY 4 X 13
466	PSB10490466	SHAFT
467	PSB10490467	OIL FENCE
468	PSB10490468	HALF NUT LEVER

REF	PART #	DESCRIPTION
469	PSB10490469	LEVER HUB
470	PSB10490470	COMPRESSION SPRING 6 X 27
472	PSB10490472	ROLL PIN 4 X 24
473	PSB10490473	O-RING 8.8 X 1.9 P9
474	PSB10490474	STEP SCREW
475	PSB10490475	HALF NUT PIVOT ROD
476	PSB10490476	STEP PIN
477	PSB10490477	PIVOT ARM
478	PSB10490478	PIVOT STOP
479	PSB10490479	HALF NUT
480	PSB10490480	HALF NUT GIB
481	PSB10490481	APRON BASE PLATE
482	PSB10490482	PIPE PLUG 1/8"PT
483	PSB10490483	ROLL PIN 4 X 36
508	PSB10490508	CAP SCREW M6-1 X 16
511	PSB10490511	PHLP HD SCR M4-.7 X 6
512	PSB10490512	CAP SCREW M5-.8 X 8
513	PSB10490513	SET SCREW M6-1 X 6
514	PSB10490514	CAP SCREW M5-.8 X 16

Compound Rest & Tool Post

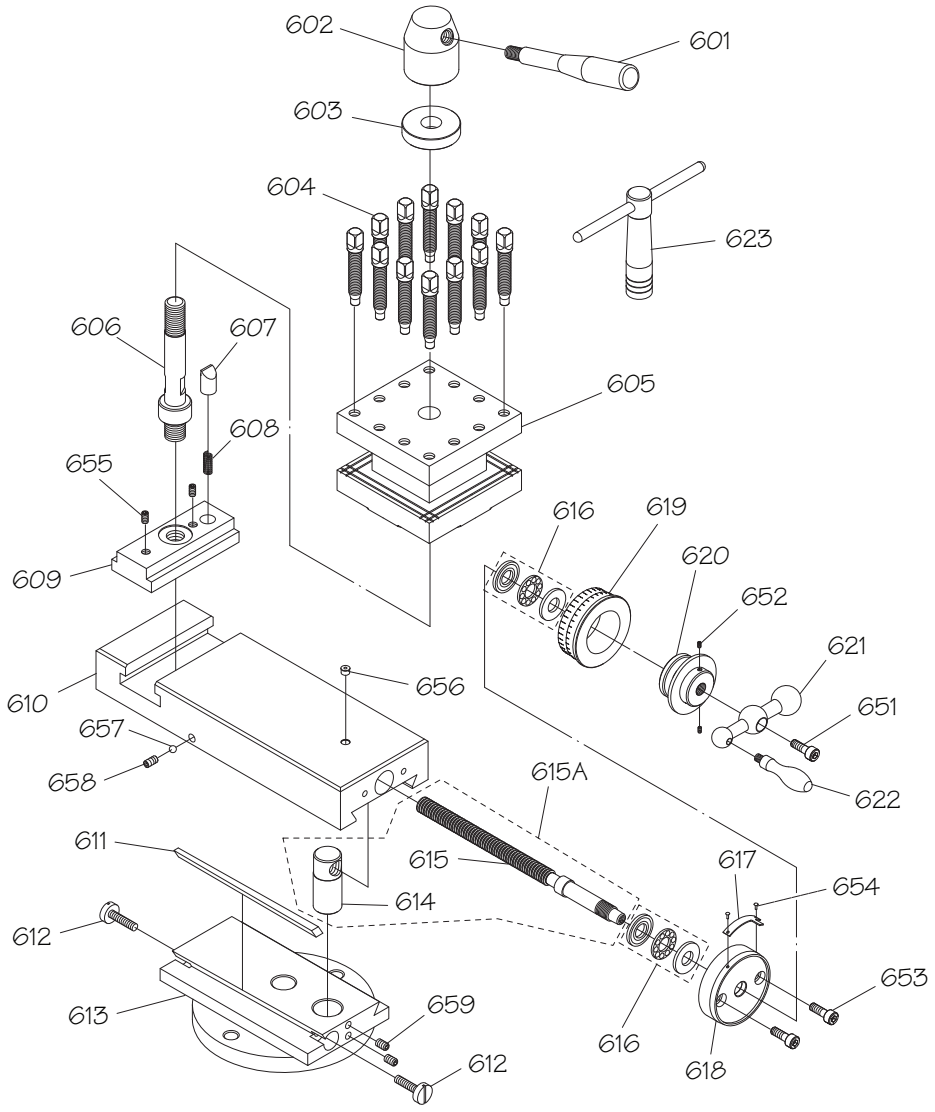

REF	PART #	DESCRIPTION
601	PSB10490601	TOOL POST LEVER
602	PSB10490602	LEVER HUB
603	PSB10490603	HUB COLLAR
604	PSB10490604	TOOL HOLDER BOLT
605	PSB10490605	TOOL POST BODY
606	PSB10490606	TOOL POST SHAFT
607	PSB10490607	PLUNGER
608	PSB10490608	COMPRESSION SPRING 6 X 27
609	PSB10490609	TOOL POST BASE
610	PSB10490610	COMPOUND REST
611	PSB10490611	COMPOUND REST GIB
612	PSB10490612	GIB ADJUSTMENT SCREW
613	PSB10490613	COMPOUND REST SWIVEL BASE
614	PSB10490614	LEADSCREW NUT
615A	PSB10490615A	LEADSCREW W/NUT ASSEMBLY
615	PSB10490615	COMPOUND REST LEADSCREW
616	PSB10490616	THRUST BEARING 51101

REF	PART #	DESCRIPTION
617	PSB10490617	INDICATOR PLATE
618	PSB10490618	LEADSCREW BRACKET
619	PSB10490619	GRADUATED DIAL
620	PSB10490620	DIAL BUSHING
621	PSB10490621	BALL HANDLE
622	PSB10490622	HANDLE
623	PSB10490623	TOOL POST WRENCH
651	PSB10490651	CAP SCREW M6-1 X 10
652	PSB10490652	SET SCREW M6-1 X 8
653	PSB10490653	CAP SCREW M6-1 X 20
654	PSB10490654	STEEL FLUTED RIVET 2 X 5MM
655	PSB10490655	SET SCREW M8-1.25 X 12
656	PSB10490656	TAP-IN BALL OILER 1/4
657	PSB10490657	STEEL BALL 1/4
658	PSB10490658	SET SCREW M8-1.25 X 10
659	PSB10490659	SET SCREW M6-1 X 8

Saddle Top View

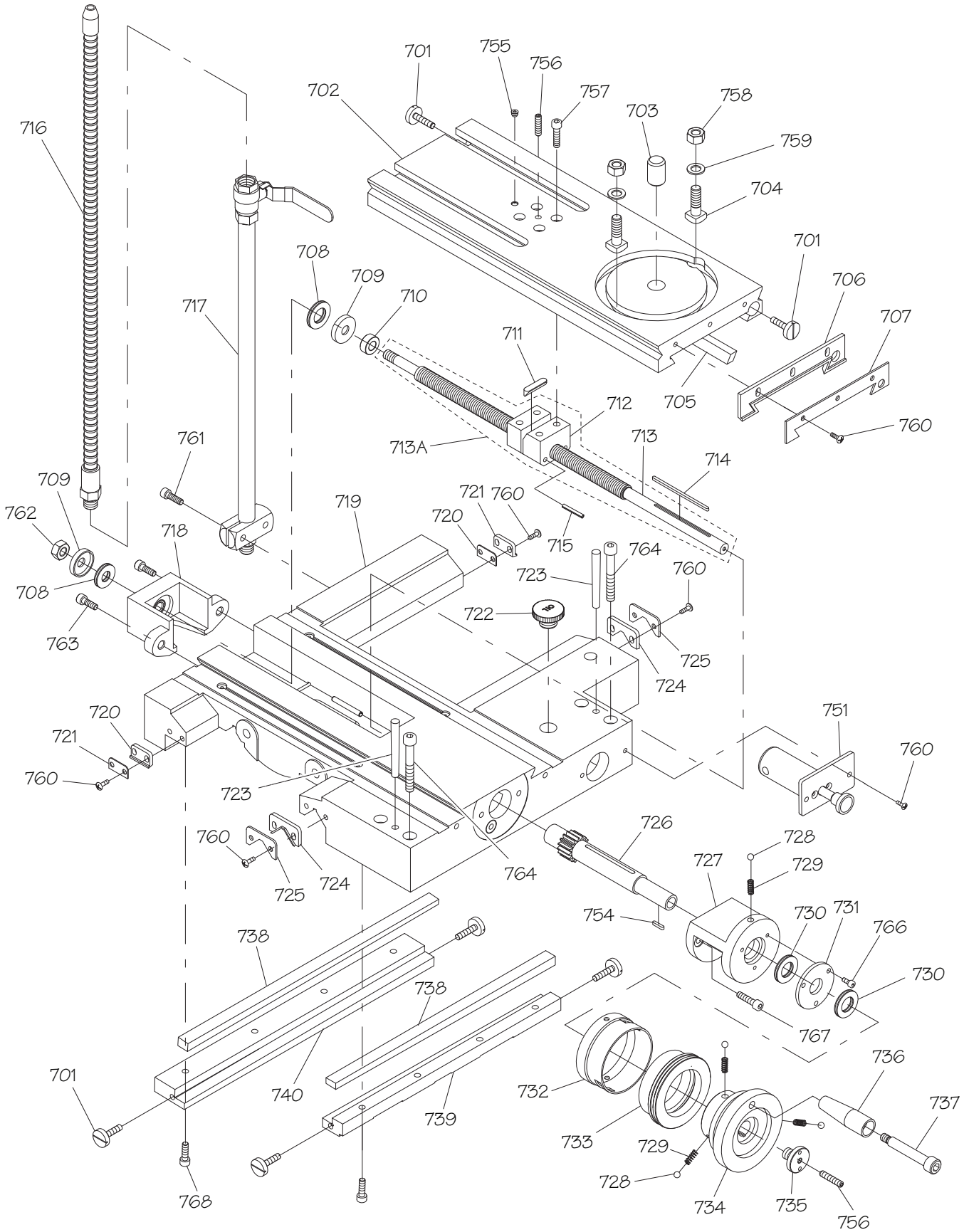

Saddle Top View Parts List

REF	PART #	DESCRIPTION
701	PSB10490701	GIB ADJUSTMENT SCREW
702	PSB10490702	CROSS SLIDE
703	PSB10490703	PIVOT PIN
704	PSB10490704	COMPOUND REST T-BOLT
705	PSB10490705	CROSS SLIDE GIB
706	PSB10490706	SADDLE WAY WIPER
707	PSB10490707	WAY WIPER PLATE
708	PSB10490708	THRUST BEARING NTB/AS2-1226
709	PSB10490709	BEARING COLLAR
710	PSB10490710	SPACER
711	PSB10490711	WEDGE KEY 7 X 7 X 30
712	PSB10490712	LEADSCREW NUT
713A	PSB10490713A	LEADSCREW W/NUT ASSEMBLY
713	PSB10490713	CROSS SLIDE LEADSCREW
714	PSB10490714	KEY 3 X 3 X 80
715	PSB10490715	ROLL PIN 5 X 40
716	PSB10490716	COOLANT NOZZLE 3/8"PT X 24"
717	PSB10490717	COOLANT STAND PIPE W/VALVE 3/8"PT
718	PSB10490718	LEADSCREW END BRACKET
719	PSB10490719	SADDLE
720	PSB10490720	STRAIGHT WAY WIPER
721	PSB10490721	STRAIGHT WIPER PLATE
722	PSB10490722	OIL CAP 3/4"NF
723	PSB10490723	TAPER PIN #6 X 2-1/2"
724	PSB10490724	V-WAY WIPER
725	PSB10490725	V-WAY WIPER PLATE
726	PSB10490726	PINION SHAFT
727	PSB10490727	PINION SHAFT BRACKET

REF	PART #	DESCRIPTION
728	PSB10490728	STEEL BALL 1/4
729	PSB10490729	COMPRESSION SPRING 6 X 15
730	PSB10490730	THRUST BEARING NTB/AS2-1730
731	PSB10490731	BRACKET END COVER
732	PSB10490732	DIAL RING
733	PSB10490733	GRADUATED DIAL
734	PSB10490734	CARRIAGE HANDWHEEL
735	PSB10490735	HANDWHEEL END CAP M12-1.75
736	PSB10490736	HANDLE
737	PSB10490737	HANDLE CAP SCREW
738	PSB10490738	SADDLE GIB
739	PSB10490739	FRONT GIB SUPPORT
740	PSB10490740	REAR GIB SUPPORT
751	PSB10490751	ONE-SHOT OILER ASSEMBLY
754	PSB10490754	KEY 3 X 3 X 15
755	PSB10490755	TAP-IN BALL OILER 1/4
756	PSB10490756	SET SCREW M6-1 X 30
757	PSB10490757	CAP SCREW M6-1 X 30
758	PSB10490758	HEX NUT M10-1.5
759	PSB10490759	FLAT WASHER 10MM
760	PSB10490760	PHLP HD SCR M5-.8 X 12
761	PSB10490761	CAP SCREW M6-1 X 25
762	PSB10490762	HEX NUT M10-1.5
763	PSB10490763	CAP SCREW M6-1 X 20
764	PSB10490764	CAP SCREW M8-1.25 X 60
766	PSB10490766	CAP SCREW M4-.7 X 10
767	PSB10490767	CAP SCREW M6-1 X 20
768	PSB10490768	CAP SCREW M6-1 X 20

Saddle Bottom View

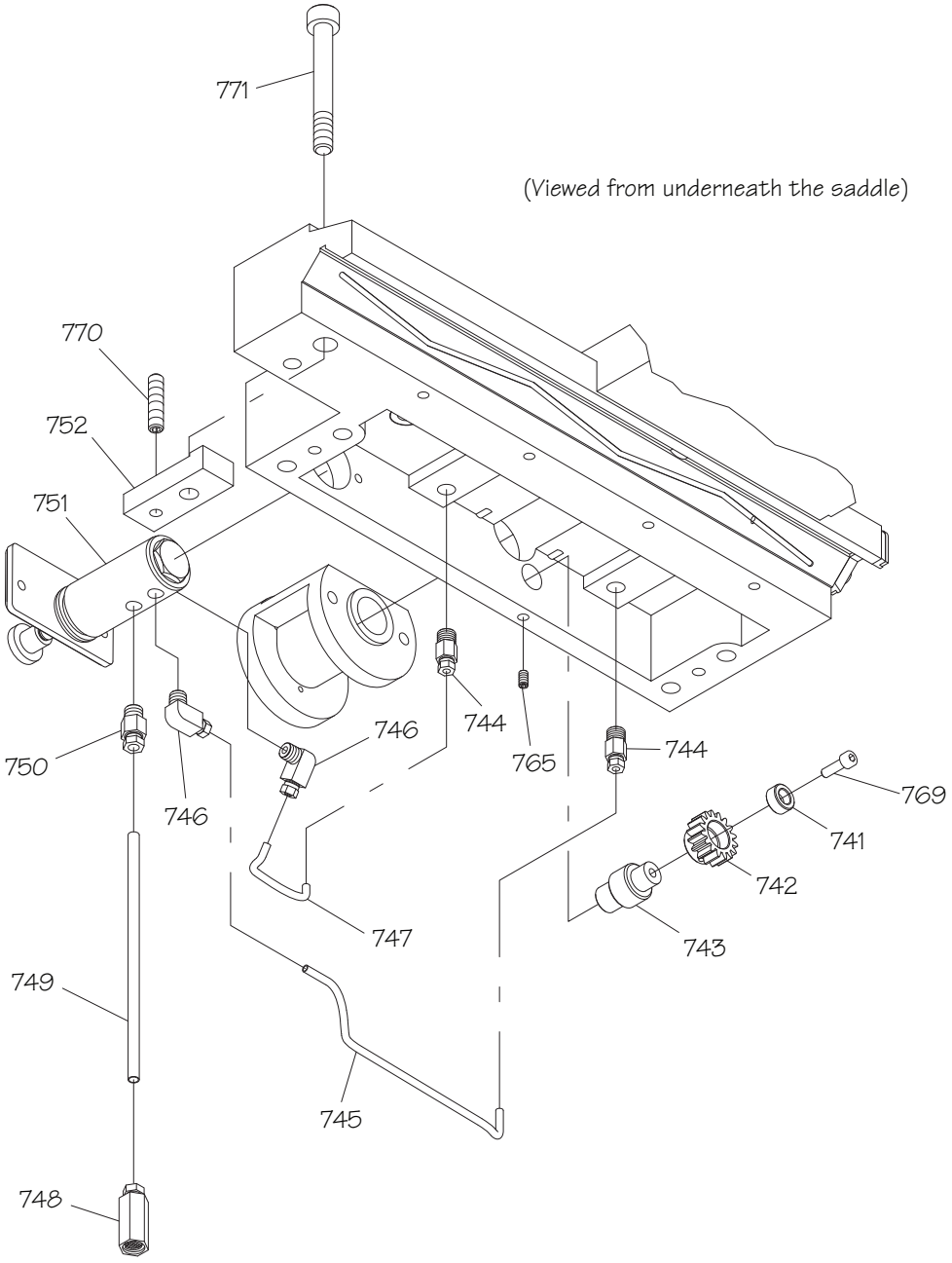

REF	PART #	DESCRIPTION
741	PSB10490741	SPACER
742	PSB10490742	GEAR 16T
743	PSB10490743	GEAR SHAFT
744	PSB10490744	STRAIGHT ADAPTER 1/8"PT X 4MM
745	PSB10490745	OIL TUBE 4 X 260MM ALUMINUM
746	PSB10490746	ELBOW ADAPTER 1/8"PT X 4MM
747	PSB10490747	OIL TUBE 4 X 120MM ALUMINUM
748	PSB10490748	OIL FILTER 6MM

REF	PART #	DESCRIPTION
749	PSB10490749	OIL TUBE 6 X 160MM ALUMINUM
750	PSB10490750	STRAIGHT ADAPTER 1/8" X 6MM
751	PSB10490751	ONE-SHOT OILER ASSEMBLY
752	PSB10490752	CLAMP PLATE
765	PSB10490765	SET SCREW M6-1 X 8
769	PSB10490769	CAP SCREW M5-.8 X 16
770	PSB10490770	SET SCREW M8-1.25 X 35
771	PSB10490771	CAP SCREW M12-1.75 X 75

Micrometer Stop

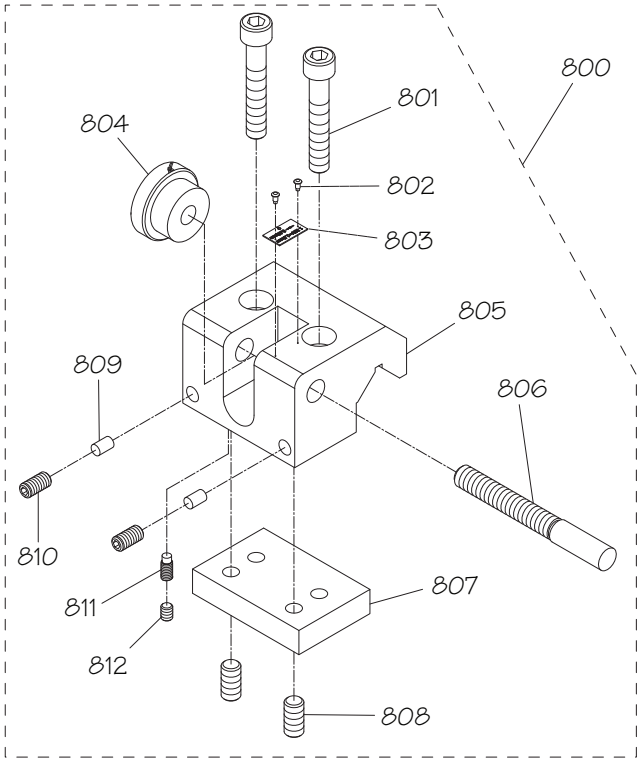

REF	PART #	DESCRIPTION
800	PSB10490800	MICROMETER STOP ASSEMBLY
801	PSB10490801	CAP SCREW M10-1.5 X 60
802	PSB10490802	STEEL FLUTED RIVET 2 X 5MM
803	PSB10490803	INDICATOR PLATE
804	PSB10490804	MICROMETER DIAL
805	PSB10490805	MICROMETER BODY
806	PSB10490806	STOP ROD
807	PSB10490807	CLAMP PLATE
808	PSB10490808	SET SCREW M10-1.5 X 20
809	PSB10490809	COPPER PLUNGER
810	PSB10490810	SET SCREW M8-1.25 X 16
811	PSB10490811	DOG POINT SET SCREW M8-1.25 X 12
812	PSB10490812	SET SCREW M8-1.25 X 12

Dial Indicator

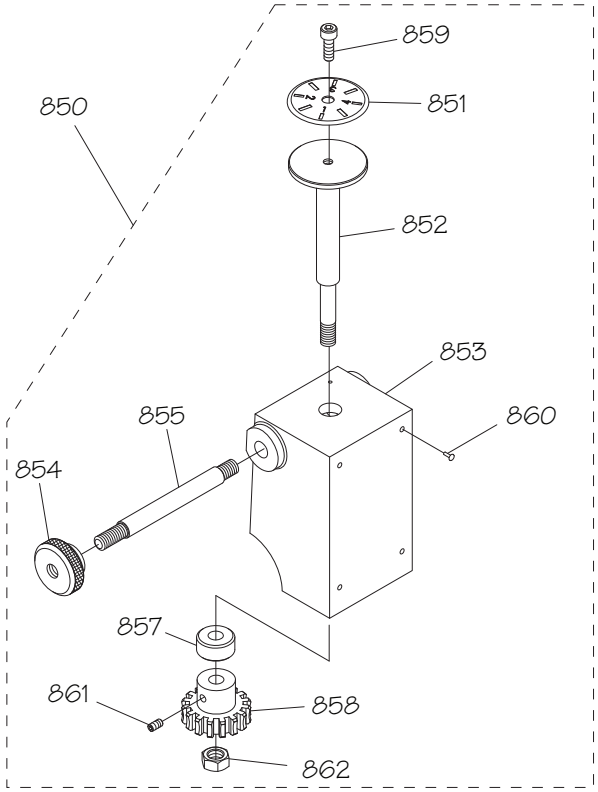

REF	PART #	DESCRIPTION
850	PSB1049850	DIAL INDICATOR ASSEMBLY
851	PSB10490851	DIAL PLATE
852	PSB10490852	PIVOT ROD
853	PSB10490853	BODY
854	PSB10490854	KNURLED KNOB
855	PSB10490855	STUD-UDE M8-1.25 X 110 20/30
857	PSB10490857	SPACER
858	PSB10490858	DIAL GEAR 16T
859	PSB10490859	CAP SCREW M6-1 X 10
860	PSB10490860	STEEL FLUTED RIVET 2 X 5MM
861	PSB10490861	SET SCREW M6-1 X 6
862	PSB10490862	HEX NUT M8-1.25

Bed & Shafts

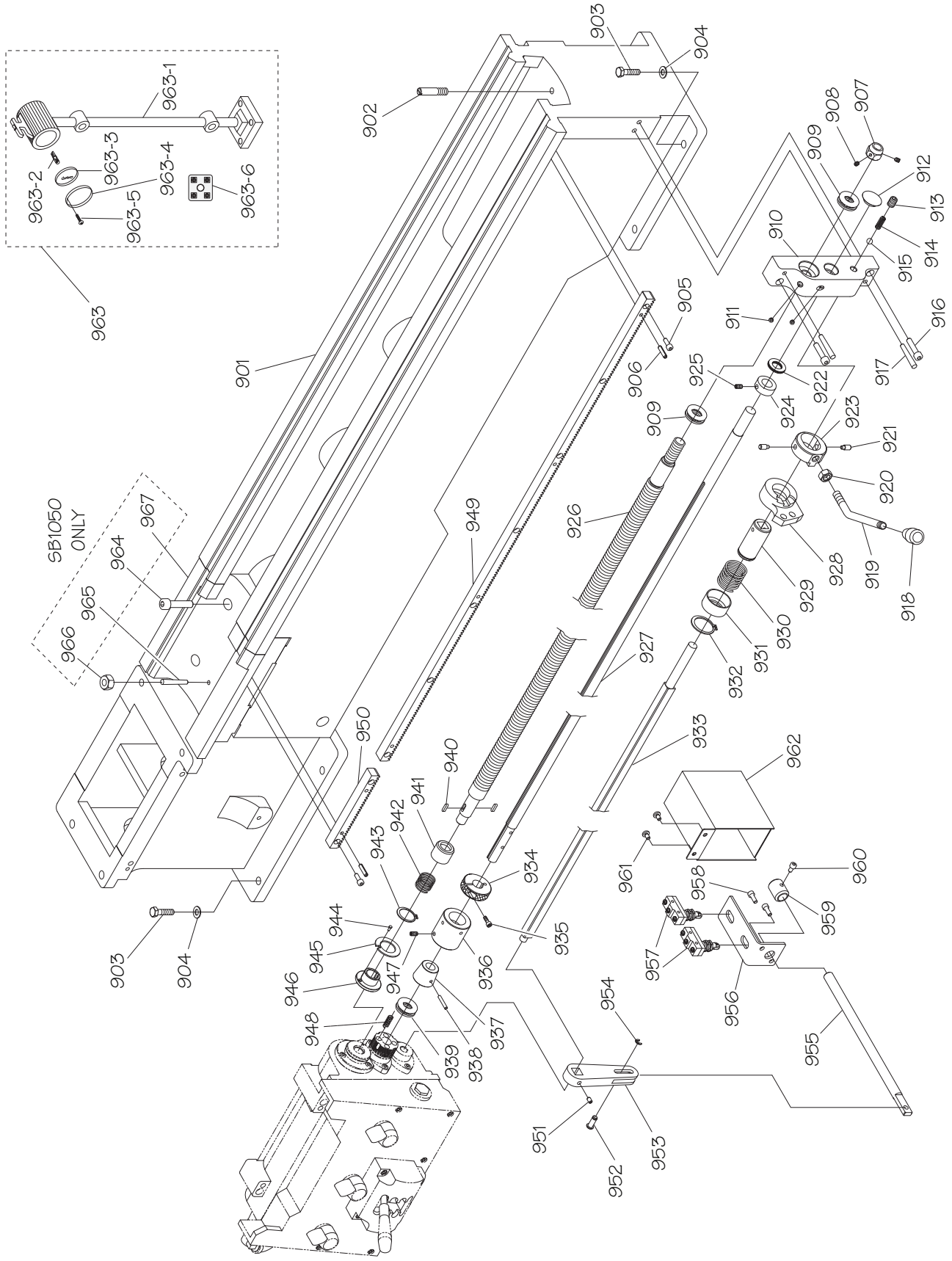
963
963-1
963-2
963-3
963-4
963-5
963-6
SB1050 ONLY
964
965
966
967
901
902
903
904
905
906
907
908
909
910
911
912
913
914
915
916
917
918
919
920
921
922
923
924
925
926
927
928
929
930
931
932
933
934
935
936
937
938
939
940
941
942
943
944
945
946
947
948
949
950
951
952
953
954
955
956
957
958
959
960
961
962

Bed & Shafts Parts List

REF	PART #	DESCRIPTION
901	PSB10490901	BED (SB1049)
901	PSB10500901	BED (SB1050)
902	PSB10490902	BED STOP BOLT
903	PSB10490903	HEX BOLT M12-1.75 X 45
904	PSB10490904	FLAT WASHER 12MM
905	PSB10490905	CAP SCREW M6-1 X 20
906	PSB10490906	ROLL PIN 6 X 25
907	PSB10490907	LEADSCREW LOCK NUT
908	PSB10490908	SET SCREW M6-1 X 8
909	PSB10490909	THRUST BEARING 51203
910	PSB10490910	SHAFT END BRACKET
911	PSB10490911	TAP-IN BALL OILER 1/4
912	PSB10490912	CASTING PLUG
913	PSB10490913	SET SCREW M12-1.75 X 12
914	PSB10490914	COMPRESSION SPRING
915	PSB10490915	STEEL BALL 3/8"
916	PSB10490916	CAP SCREW M8-1.25 X 35
917	PSB10490917	TAPER PIN #6 X 2"
918	PSB10490918	KNOB
919	PSB10490919	SPINDLE LEVER
920	PSB10490920	HEX NUT M12-1.75
921	PSB10490921	STEP PIN
922	PSB10490922	THRUST BEARING NTB/AS21831
923	PSB10490923	SPINDLE LEVER HUB
924	PSB10490924	LOCK COLLAR
925	PSB10490925	SET SCREW M6-1 X 8
926	PSB10490926	LONGITUDINAL LEADSCREW (SB1049)
926	PSB10500926	LONGITUDINAL LEADSCREW (SB1050)
927	PSB10490927	FEED ROD (SB1049)
927	PSB10500927	FEED ROD (SB1050)
928	PSB10490928	SPINDLE ROD BRACKET
929	PSB10490929	SPINDLE ROD SLEEVE
930	PSB10490930	COMPRESSION SPRING
931	PSB10490931	SPRING HOUSING
932	PSB10490932	EXT RETAINING RING 32MM
933	PSB10490933	SPINDLE ROD (SB1049)
933	PSB10500933	SPINDLE ROD (SB1050)
934	PSB10490934	CARRIAGE STOP COLLAR
935	PSB10490935	CAP SCREW M6-1 X 20

REF	PART #	DESCRIPTION
936	PSB10490936	CLUTCH COLLAR
937	PSB10490937	CLUTCH BUSHING
938	PSB10490938	TAPER PIN #4 X 1-1/4"
939	PSB10490939	THRUST BEARING 51203
940	PSB10490940	KEY 5 X 5 X 15
941	PSB10490941	SPRING HOUSING
942	PSB10490942	SPRING
943	PSB10490943	EXT RETAINING RING 32MM
944	PSB10490944	SHEAR PIN
945	PSB10490945	SHROUD WASHER
946	PSB10490946	SHEAR PIN COLLAR
947	PSB10490947	SET SCREW M6-1 X 6
948	PSB10490948	SPRING 8 X 32
949	PSB10490949	BED RACK (SB1049)
949	PSB10500949	BED RACK (SB1050)
950	PSB10500950	GAP RACK (SB1050)
951	PSB10490951	SET SCREW M8-1.25 X 12
952	PSB10490952	CAPTIVE PIN
953	PSB10490953	PIVOT ARM
954	PSB10490954	E-CLIP 6MM
955	PSB10490955	SPINDLE SWITCH LINKAGE
956	PSB10490956	SPINDLE SWITCH BRACKET
957	PSB10490957	MICRO SWITCH TEND TM-1308
958	PSB10490958	CAP SCREW M6-1 X 16
959	PSB10490959	LOCK COLLAR
960	PSB10490960	CAP SCREW M6-1 X 10
961	PSB10490961	PHLP HD SCR M6-1 X 10
962	PSB10490962	SPINDLE SWITCH COVER
963	PSB10490963	HALOGEN LAMP ASSEMBLY
963-1	PSB10490963-1	LAMP BODY
963-2	PSB10490963-2	HALOGEN BULB 24V
963-3	PSB10490963-3	LENS
963-4	PSB10490963-4	LENS RETAINER
963-5	PSB10490963-5	PHLP HD SCR M3-.5 X 10
963-6	PSB10490963-6	LAMP TERMINAL BLOCK 2P
964	PSB10500964	CAP SCREW M10-1.5 X 25 (SB1050)
965	PSB10500965	GAP INSERT TAPER PIN (SB1050)
966	PSB10500966	HEX NUT M8-1.25 (SB1050)
967	PSB10500967	GAP INSERT (SB1050)

End Gears

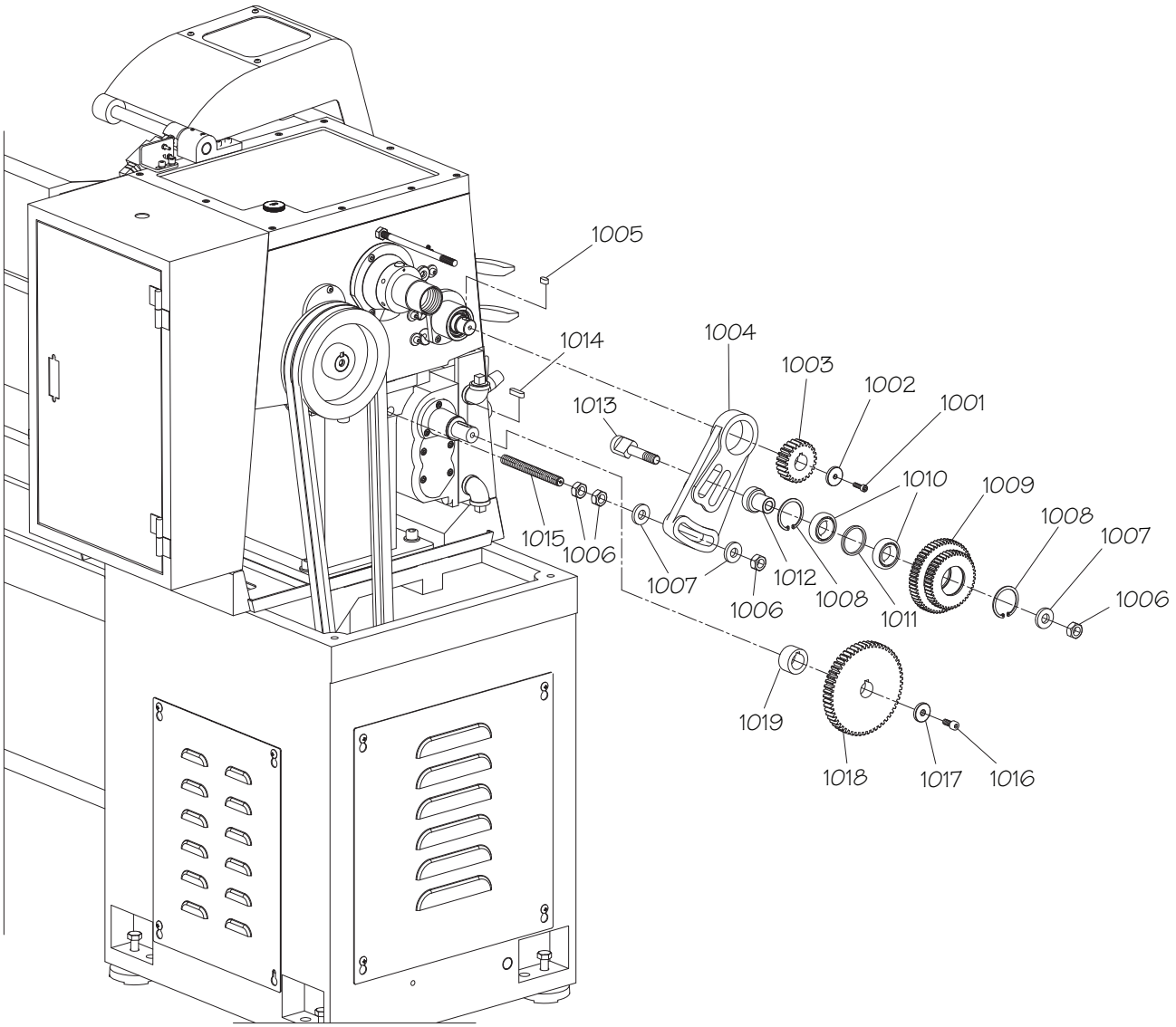

REF	PART #	DESCRIPTION
1001	PSB10491001	CAP SCREW M6-1 X 20
1002	PSB10491002	GEAR FLAT WASHER 6MM
1003	PSB10491003	GEAR 24T
1004	PSB10491004	PIVOT FRAME
1005	PSB10491005	KEY 7 X 7 X 15
1006	PSB10491006	HEX NUT M14-2
1007	PSB10491007	GEAR FLAT WASHER 14MM
1008	PSB10491008	INT RETAINING RING 47MM
1009	PSB10491009	COMBO GEAR 44T/56T
1010	PSB10491010	BALL BEARING 6005ZZ

REF	PART #	DESCRIPTION
1011	PSB10491011	SPACER
1012	PSB10491012	SHAFT COLLAR
1013	PSB10491013	GEAR SHAFT
1014	PSB10491014	KEY 7 X 7 X 30
1015	PSB10491015	STUD-FT M14-2 X 180
1016	PSB10491016	CAP SCREW M8-1.25 X 20
1017	PSB10491017	GEAR FLAT WASHER 8MM
1018	PSB10491018	GEAR 57T
1019	PSB10491019	SPACER

Main Motor

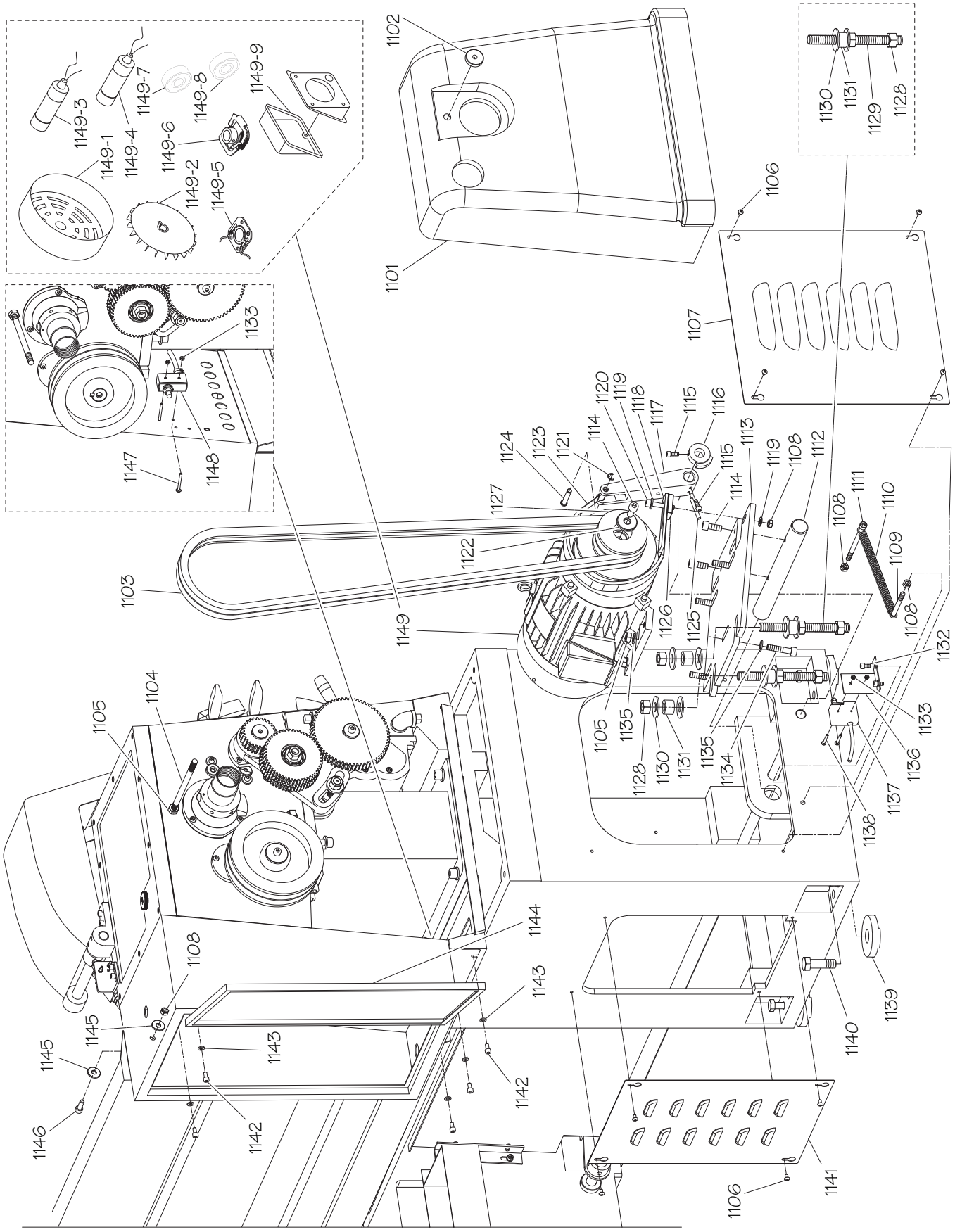
1149-3
1149-7
1149-8
1149-9
1149-1
1149-4
1149-6
1149-2
1149-5
1102
1101
1130
1131
1129
1128
1106
1107
1133
1147
1148
1120
1119
1118
1117
1115
1116
1124
1123
1121
1114
1113
1119
1108
1112
1127
1122
1103
1149
1126
1125
1111
1110
1109
1108
1132
1105
1104
1135
1128
1130
1131
1134
1136
1137
1138
1144
1143
1145
1146
1142
1139
1140
1141

Main Motor Parts List

REF	PART #	DESCRIPTION
1101	PSB10491101	END GEAR COVER
1102	PSB10491102	KNURLED KNOB M10-1.5
1103	PSB10491103	V-BELT B76
1104	PSB10491104	STUD-DE M10-1.5 X 200
1105	PSB10491105	HEX NUT M10-1.5
1106	PSB10491106	PHLP HD SCR M6-1 X 10
1107	PSB10491107	SIDE MOTOR ACCESS COVER
1108	PSB10491108	HEX NUT M8-1.25
1109	PSB10491109	SPRING CAPTIVE BOLT
1110	PSB10491110	EXTENSION SPRING
1111	PSB10491111	CAP SCREW M8-1.25 X 120
1112	PSB10491112	MOTOR MOUNT SHAFT
1113	PSB10491113	MOTOR MOUNT
1114	PSB10491114	CAP SCREW M10-1.5 X 25
1115	PSB10491115	CAP SCREW M6-1 X 16
1116	PSB10491116	BRAKE CAM
1117	PSB10491117	BRAKE LEVER
1118	PSB10491118	BRAKE BELT MOUNT
1119	PSB10491119	FLAT WASHER 8MM
1120	PSB10491120	CAP SCREW M8-1.25 X 45
1121	PSB10491121	E-CLIP 8MM
1122	PSB10491122	PULLEY FLAT WASHER 10MM
1123	PSB10491123	BRAKE BELT
1124	PSB10491124	CAPTIVE PIN
1125	PSB10491125	TAPER PIN #4 X 3/4"
1126	PSB10491126	BRAKE BELT BRACKET
1127	PSB10491127	MOTOR PULLEY
1128	PSB10491128	HEX NUT M16-2
1129	PSB10491129	STUD-FT M16-2 X 170

REF	PART #	DESCRIPTION
1130	PSB10491130	FLAT WASHER 16MM
1131	PSB10491131	RUBBER SHOCK ABSORBER
1132	PSB10491132	CAP SCREW M6-1 X 12
1133	PSB10491133	HEX NUT M4-.7
1134	PSB10491134	CAP SCREW M10-1.5 X 45
1135	PSB10491135	FLAT WASHER 10MM
1136	PSB10491136	BRAKE SWITCH BRACKET
1137	PSB10491137	MICRO SWITCH TEND TM-1704
1138	PSB10491138	PHLP HD SCR M4-.7 X 30
1139	PSB10491139	FOOT PAD
1140	PSB10491140	HEX BOLT M16-2 X 50
1141	PSB10491141	REAR MOTOR ACCESS COVER
1142	PSB10491142	CAP SCREW M6-1 X 10
1143	PSB10491143	FLAT WASHER 6MM
1144	PSB10491144	ELECTRICAL CABINET W/DOOR ASSY
1145	PSB10491145	FLAT WASHER 8MM
1146	PSB10491146	CAP SCREW M8-1.25 X 20
1147	PSB10491147	PHLP HD SCR M4-.7 X 40
1148	PSB10491148	MICRO SWITCH TEND TM-1307
1149	PSB10491149	MOTOR 3HP 220V 1PH
1149-1	PSB10491149-1	MOTOR FAN COVER
1149-2	PSB10491149-2	MOTOR FAN
1149-3	PSB10491149-3	S CAPACITOR 600M 250V 1-3/4 X 4
1149-4	PSB10491149-4	R CAPACITOR 50M 250V 2 X 3-3/8
1149-5	PSB10491149-5	CONTACT PLATE
1149-6	PSB10491149-6	CENTRIFUGAL SWITCH
1149-7	PSB10491149-7	FRONT MOTOR BEARING
1149-8	PSB10491149-8	REAR MOTOR BEARING
1149-9	PSB10491149-9	MOTOR JUNCTION BOX

Stands & Panels

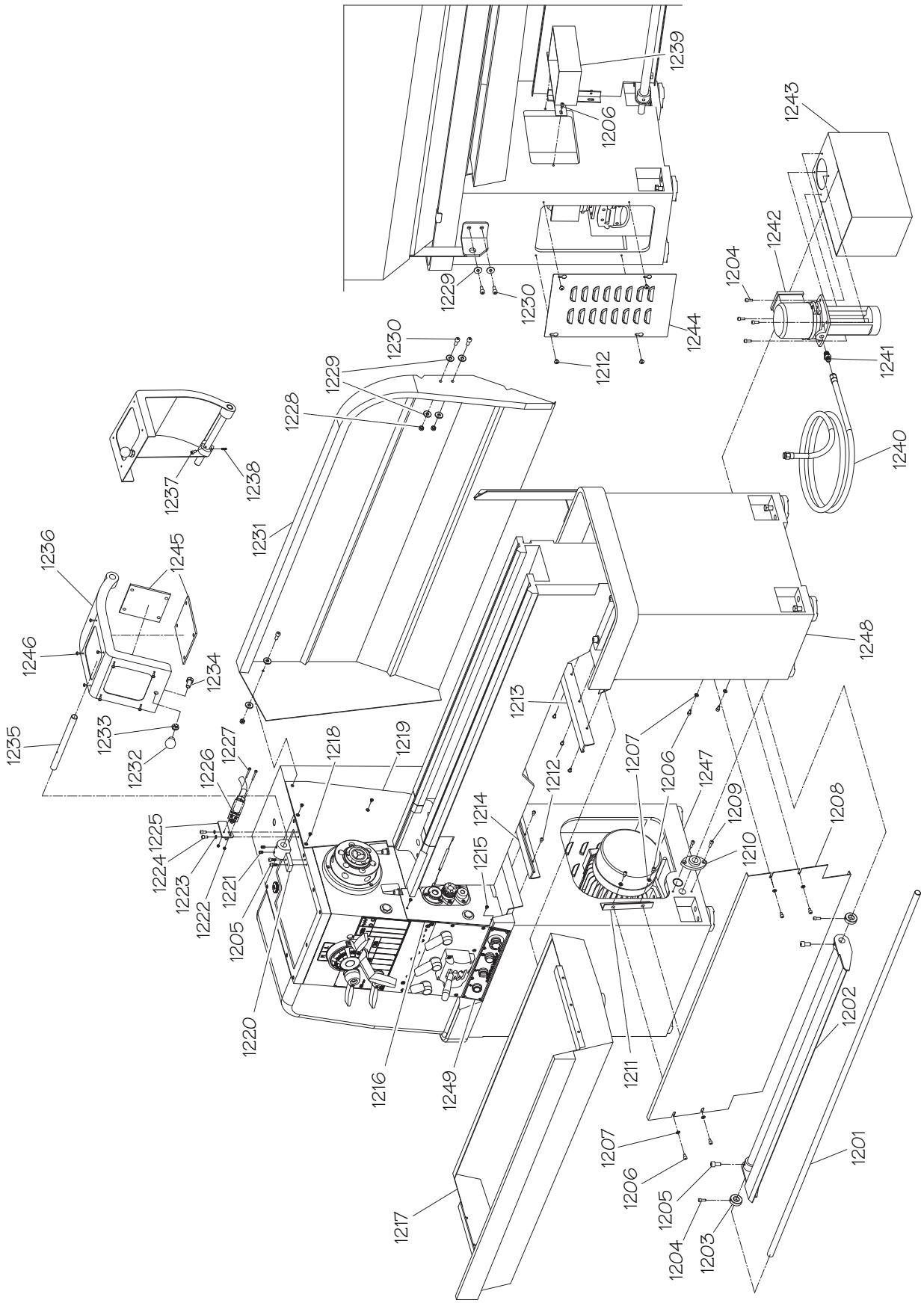

Cabinets & Panels Parts List

REF	PART #	DESCRIPTION
1201	PSB10491201	BRAKE PEDAL ROD (SB1049)
1201	PSB10491201	BRAKE PEDAL ROD (SB1050)
1202	PSB10491202	BRAKE PEDAL (SB1049)
1202	PSB10491202	BRAKE PEDAL (SB1050)
1203	PSB10491203	LOCK COLLAR
1204	PSB10491204	CAP SCREW M6-1 X 16
1205	PSB10491205	CAP SCREW M10-1.5 X 20
1206	PSB10491206	CAP SCREW M6-1 X 10
1207	PSB10491207	FLAT WASHER 6MM
1208	PSB10491208	CENTER PANEL (SB1049)
1208	PSB10491208	CENTER PANEL (SB1050)
1209	PSB10491209	CAP SCREW M6-1 X 20
1210	PSB10491210	FLANGE BEARING
1211	PSB10491211	CENTER PANEL BRACKET
1212	PSB10491212	PHLP HD SCR M6-1 X 10
1213	PSB10491213	RIGHT CHIP TRAY SLIDE
1214	PSB10491214	LEFT CHIP TRAY SLIDE
1215	PSB10491215	PHLP HD SCR M5-.8 X 8
1216	PSB10491216	RIGHT FRONT HEADSTOCK COVER
1217	PSB10491217	CHIP TRAY (SB1049)
1217	PSB10491217	CHIP TRAY (SB1050)
1218	PSB10491218	FLAT HD CAP SCR M5-.8 X 8
1219	PSB10491219	RIGHT REAR HEADSTOCK COVER
1220	PSB10491220	CHIP GUARD PIVOT BRACKET
1221	PSB10491221	SET SCREW M8-1.25 X 12
1222	PSB10491222	HEX NUT M4-.7
1223	PSB10491223	LOCK WASHER 6MM

REF	PART #	DESCRIPTION
1224	PSB10491224	CAP SCREW M6-1 X 12
1225	PSB10491225	SAFETY SWITCH BRACKET
1226	PSB10491226	LIMIT SWITCH TEND TZ-9212
1227	PSB10491227	PHLP HD SCR M4-.7 X 40
1228	PSB10491228	HEX NUT M8-1.25
1229	PSB10491229	FLAT WASHER 8MM
1230	PSB10491230	CAP SCREW M8-1.25 X 20
1231	PSB10491231	BACK SPLASH (SB1049)
1231	PSB10491231	BACK SPLASH (SB1050)
1232	PSB10491232	KNOB M12-1.75
1233	PSB10491233	HEX NUT M12-1.75
1234	PSB10491234	CAP SCREW M12-1.75 X 20
1235	PSB10491235	CHUCK GUARD PIVOT ROD
1236	PSB10491236	CHUCK GUARD FRAME
1237	PSB10491237	CAP SCREW M6-1 X 12
1238	PSB10491238	SET SCREW M5-.8 X 16
1239	PSB10491239	COOLANT CHUTE
1240	PSB10491240	COOLANT HOSE 3/8" X 72"
1241	PSB10491241	STRAIGHT ADAPTER 3/8"PT X 3/8"PH
1242	PSB10491242	COOLANT PUMP MOTOR 1/8HP 220V 1PH
1243	PSB10491243	COOLANT TANK
1244	PSB10491244	COOLANT PUMP ACCESS COVER
1245	PSB10491245	CHUCK GUARD PLEXIGLAS WINDOW
1246	PSB10491246	BUTTON HD CAP SCR M6-1 X 12
1247	PSB10491247	LEFT STAND
1248	PSB10491248	RIGHT STAND
1249	PSB10491249	CONTROL PANEL PLATE

Tailstock

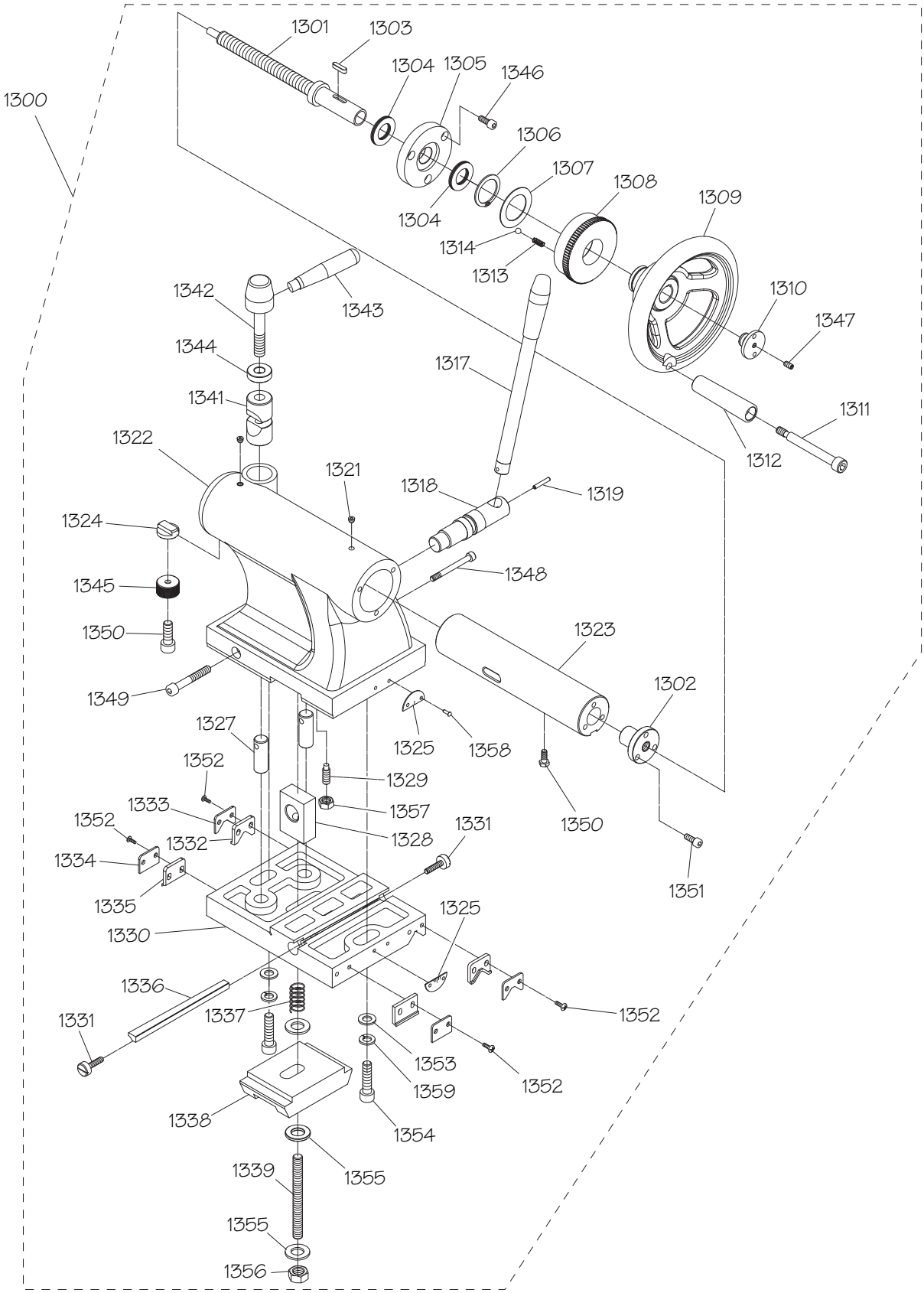
1300
1301
1303
1304
1305
1346
1306
1307
1308
1309
1304
1314
1313
1310
1347
1311
1312
1342
1343
1344
1317
1341
1322
1321
1318
1319
1324
1348
1345
1323
1350
1349
1302
1327
1325
1358
1352
1329
1333
1357
1352
1328
1331
1332
1350
1334
1351
1335
1325
1330
1336
1337
1352
1331
1353
1359
1352
1338
1354
1339
1355
1355
1356

Tailstock Parts List

REF	PART #	DESCRIPTION
1300	PSB10491300	TAILSTOCK ASSEMBLY
1301	PSB10491301	TAILSTOCK LEADSCREW
1302	PSB10491302	LEADSCREW NUT
1303	PSB10491303	KEY 5 X 5 X 20
1304	PSB10491304	THRUST BEARING NTB/AS2035
1305	PSB10491305	BEARING SEAT
1306	PSB10491306	EXT RETAINING RING 32MM
1307	PSB10491307	SPACER
1308	PSB10491308	GRADUATED RING
1309	PSB10491309	HANDWHEEL
1310	PSB10491310	HANDWHEEL END CAP
1311	PSB10491311	HANDLE CAP SCREW M8-1.25 X 90
1312	PSB10491312	HANDLE
1313	PSB10491313	COMPRESSION SPRING 6.2 X 16
1314	PSB10491314	STEEL BALL 1/4"
1317	PSB10491317	TAILSTOCK LOCK LEVER
1318	PSB10491318	CAM SHAFT
1319	PSB10491319	ROLL PIN 4 X 24
1321	PSB10491321	TAP-IN BALL OILER 1/4"
1322	PSB10491322	TAILSTOCK CASTING
1323	PSB10491323	QUILL
1324	PSB10491324	QUILL GUIDE KEY
1325	PSB10491325	OFFSET SCALE 2PC
1327	PSB10491327	OFFSET ALIGNMENT PIN
1328	PSB10491328	ALIGNMENT BLOCK
1329	PSB10491329	DOG POINT SET SCREW
1330	PSB10491330	TAILSTOCK BASE
1331	PSB10491331	GIB ADJUSTMENT SCREW

REF	PART #	DESCRIPTION
1332	PSB10491332	V-WAY WIPER
1333	PSB10491333	V-WAY WIPER PLATE
1334	PSB10491334	STRAIGHT WAY WIPER PLATE
1335	PSB10491335	STRAIGHT WAY WIPER
1336	PSB10491336	TAILSTOCK GIB
1337	PSB10491337	COMPRESSION SPRING 25 X 45
1338	PSB10491338	CLAMP PLATE
1339	PSB10491339	STUD-FT M14-2 X 110
1341	PSB10491341	QUILL LOCK SHAFT 2PC
1342	PSB10491342	QUILL LOCK BOLT
1343	PSB10491343	QUILL LOCK LEVER
1344	PSB10491344	LOCK SHAFT FLAT WASHER 12MM
1345	PSB10491345	GUIDE KEY BASE
1346	PSB10491346	CAP SCREW M6-1 X 16
1347	PSB10491347	SET SCREW M6-1 X 12
1348	PSB10491348	CAP SCREW M8-1.25 X 70
1349	PSB10491349	CAP SCREW M8-1.25 X 60
1350	PSB10491350	CAP SCREW M6-1 X 8
1351	PSB10491351	CAP SCREW M6-1 X 16
1352	PSB10491352	PHLP HD SCR M5-.8 X 12
1353	PSB10491353	FLAT WASHER 10MM
1354	PSB10491354	CAP SCREW M10-1.5 X 40
1355	PSB10491355	FLAT WASHER 14MM
1356	PSB10491356	HEX NUT M14-2
1357	PSB10491357	HEX NUT M8-1.25
1358	PSB10491358	STEEL FLUTED RIVET 2 X 5MM
1359	PSB10491359	LOCK WASHER 10MM

Steady Rest

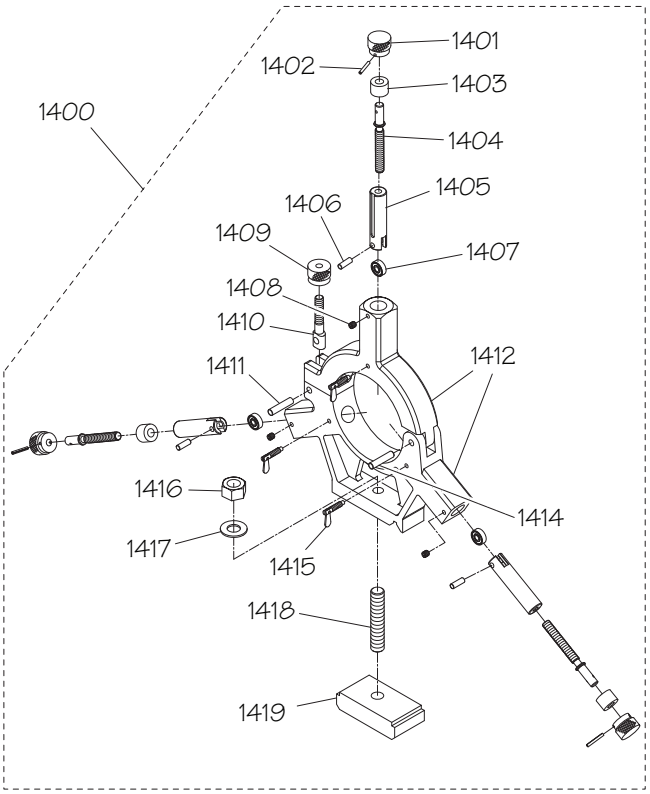

REF	PART #	DESCRIPTION
1400	PSB10491400	STEADY REST ASSEMBLY
1401	PSB10491401	FINGER ADJUSTMENT KNOB
1402	PSB10491402	ROLL PIN 4 X 40
1403	PSB10491403	SPACER
1404	PSB10491404	FINGER SCREW
1405	PSB10491405	FINGER
1406	PSB10491406	DOWEL PIN
1407	PSB10491407	BALL BEARING 627ZZ
1408	PSB10491408	SET SCREW M8-1.25 X 8
1409	PSB10491409	KNURLED KNOB
1410	PSB10491410	CLAMPING SCREW
1411	PSB10491411	DOWEL PIN
1412	PSB10491412	STEADY REST CASTING 2PC
1414	PSB10491414	HINGE PIN
1415	PSB10491415	DOG POINT LEAF SCREW
1416	PSB10491416	HEX NUT M12-1.75
1417	PSB10491417	LOCK WASHER 12MM
1418	PSB10491418	STUD-FT M12-1.75 X 75
1419	PSB10491419	CLAMP PLATE

Follow Rest

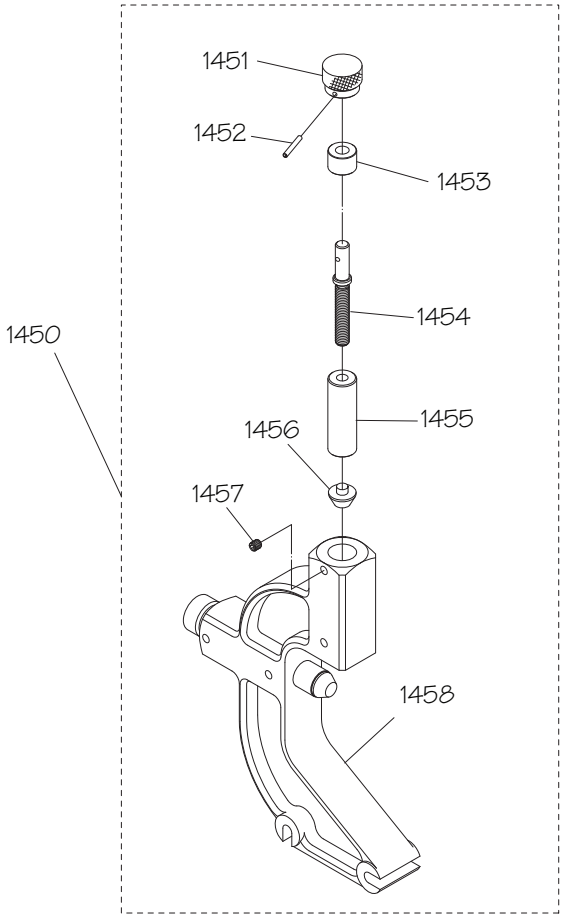

REF	PART #	DESCRIPTION
1450	PSB10491450	FOLLOW REST ASSEMBLY
1451	PSB10491451	FINGER ADJUSTMENT KNOB
1452	PSB10491452	ROLL PIN 4 X 40
1453	PSB10491453	SPACER
1454	PSB10491454	FINGER SCREW
1455	PSB10491455	FINGER
1456	PSB10491456	FINGER BRASS TIP
1457	PSB10491457	SET SCREW M8-1.25 X 8
1458	PSB10491458	FOLLOW REST CASTING

Electrical Cabinet & Control Panel

Electrical Cabinet

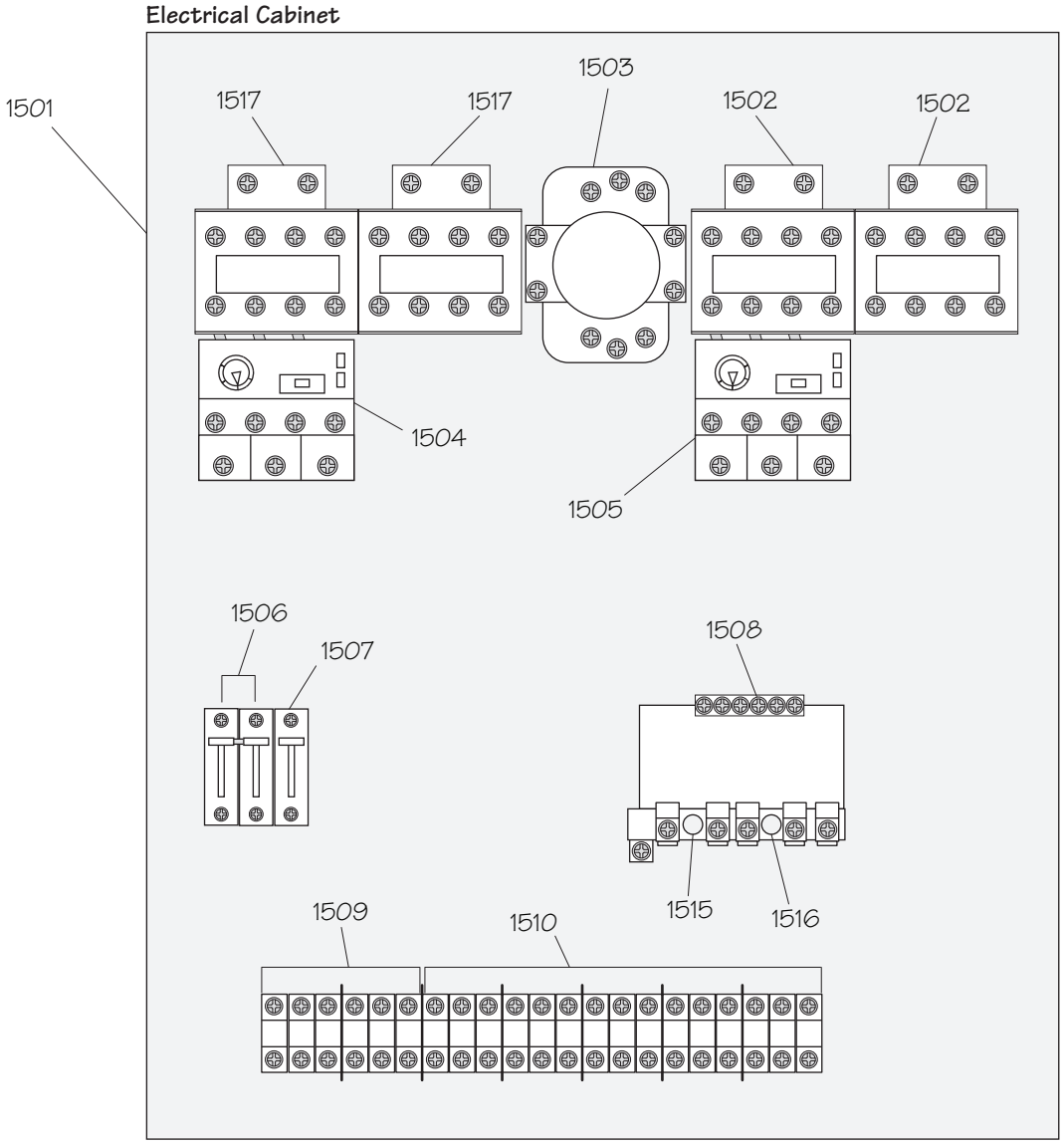

Control Panel

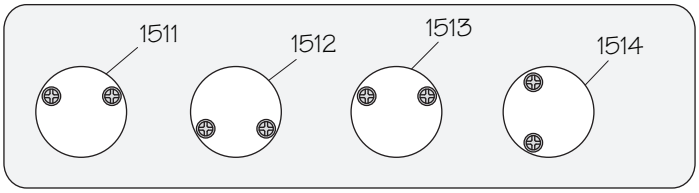

REF	PART #	DESCRIPTION
1501	PSB10491501	ELECTRICAL CABINET BACK PLATE
1502	PSB10491502	CONTACTOR AB C09400 220V
1503	PSB10491503	MASTER POWER SWITCH GZ SE16
1504	PSB10491504	OL RELAY AB 193T1AC25 21-25A
1505	PSB10491505	OL RELAY AB 193T1AB10 0.75-1A
1506	PSB10491506	CIRCUIT BREAKER AB D25
1507	PSB10491507	CIRCUIT BREAKER AB D6
1508	PSB10491508	TRANSFORMER SL SPTBSW10140
1509	PSB10491509	TERMINAL BLOCK MACK IN20C 3-POST

REF	PART #	DESCRIPTION
1510	PSB10491510	TERMINAL BLOCK MACK IN13C 3-POST
1511	PSB10491511	STOP BUTTON ASSEMBLY
1512	PSB10491512	JOG BUTTON ASSEMBLY
1513	PSB10491513	COOLANT PUMP SWITCH ASSEMBLY
1514	PSB10491514	POWER LIGHT ASSEMBLY
1515	PSB10491515	FUSE HOLDER W/4A FUSE
1516	PSB10491516	FUSE HOLDER W/0.5 FUSE
1517	PSB10491517	CONTACTOR AB C2301 220V

Accessories

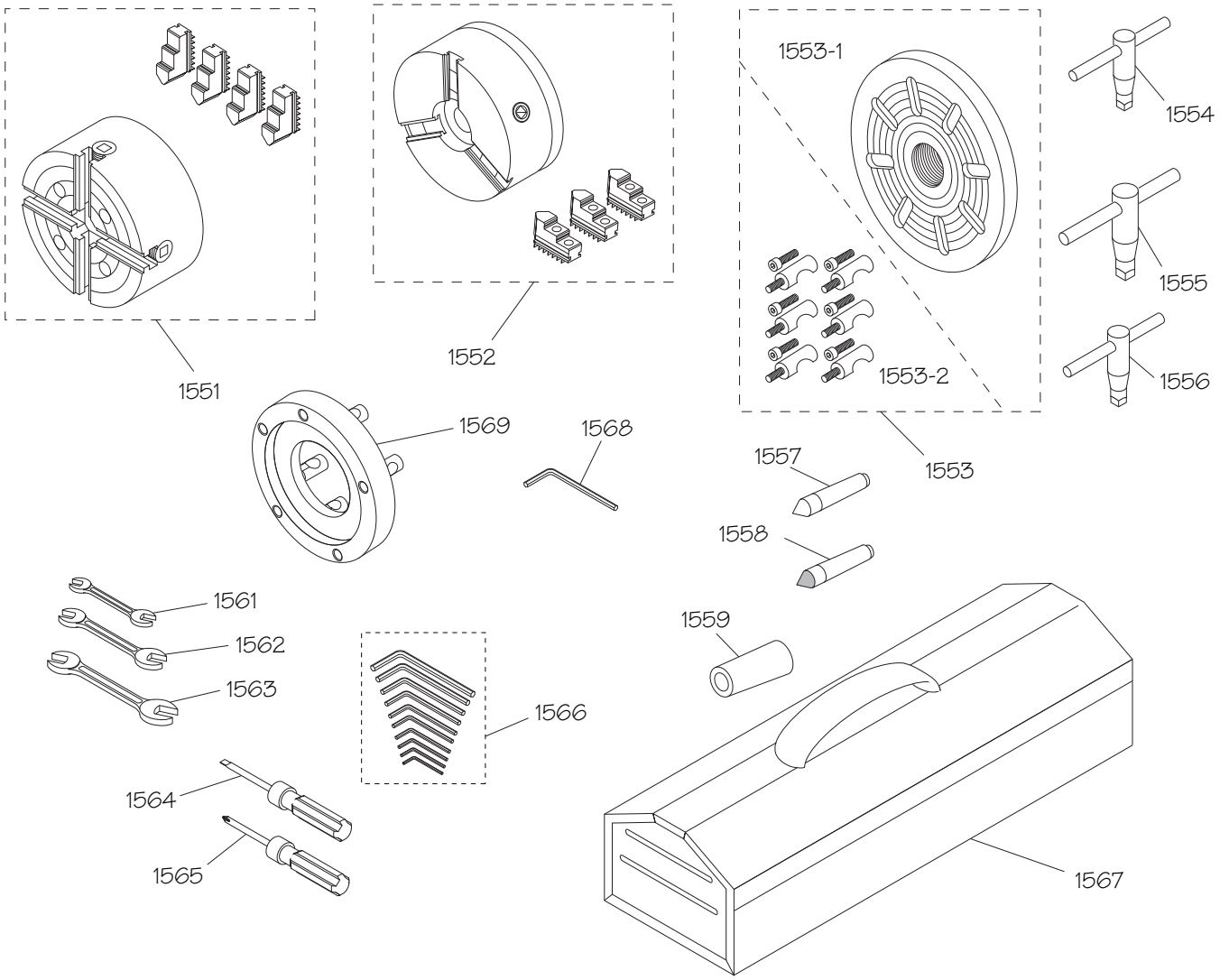

REF	PART #	DESCRIPTION
1551	PSB10491551	4-JAW CHUCK 8" ASSEMBLY
1552	PSB10491552	3-JAW CHUCK 7" W/2PC JAW SET
1553	PSB10491553	FACEPLATE ASSEMBLY 10"
1553-1	PSB10491553-1	FACEPLATE BODY 10"
1553-2	PSB10491553-2	FACEPLATE CAMLOCK STUD SET
1554	PSB10491554	3-JAW CHUCK KEY
1555	PSB10491555	4-JAW CHUCK KEY
1556	PSB10491556	CAMLOCK KEY D1-5
1557	PSB10491557	DEAD CENTER MT#3 HSS TIP
1558	PSB10491558	DEAD CENTER MT#3 CARBIDE TIP

REF	PART #	DESCRIPTION
1559	PSB10491559	SPINDLE SLEEVE MT#3/MT#5
1561	PSB10491561	WRENCH 10/12MM
1562	PSB10491562	WRENCH 14/17MM
1563	PSB10491563	WRENCH 22/24MM
1564	PSB10491564	SCREWDRIVER FLAT #2
1565	PSB10491565	SCREWDRIVER PHILLIPS #2
1566	PSB10491566	HEX WRENCH SET 10PC 1.5-10MM
1567	PSB10491567	TOOLBOX
1568	PSB10491568	HEX WRENCH 8MM
1569	PSB10491569	BACK PLATE D1-5 8-1/4"

Front Machine Labels

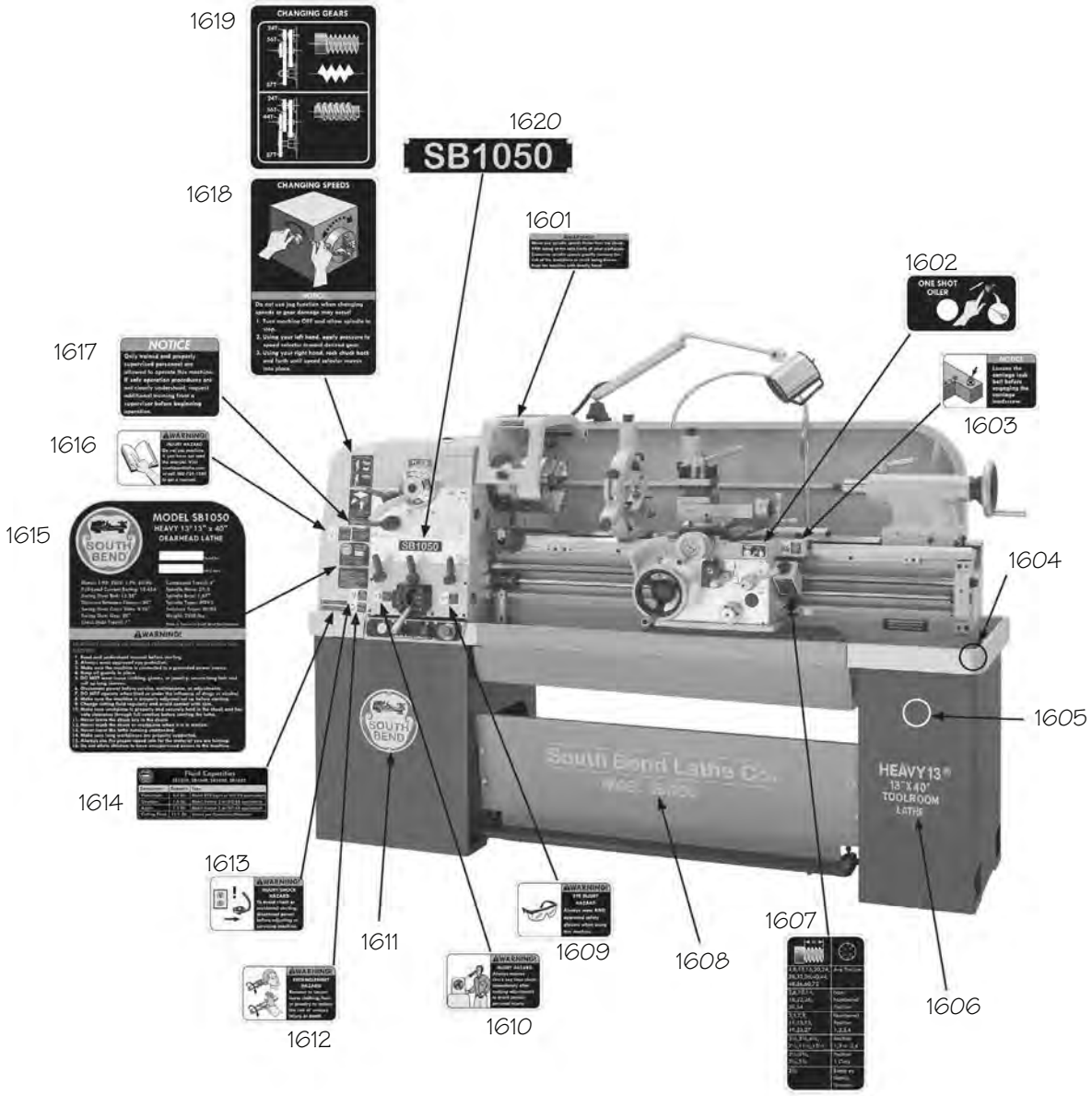

⚠WARNING

The safety labels provided with your machine are used to make the operator aware of the machine hazards and ways to prevent injury. The owner of this machine MUST maintain the original location and readability of these safety labels. If any label is removed or becomes unreadable, REPLACE that label before using the machine again. Contact South Bend Lathe Co. at (360) 734-1540 or www.southbendlathe.com to order new labels.

Rear & Side Machine Labels

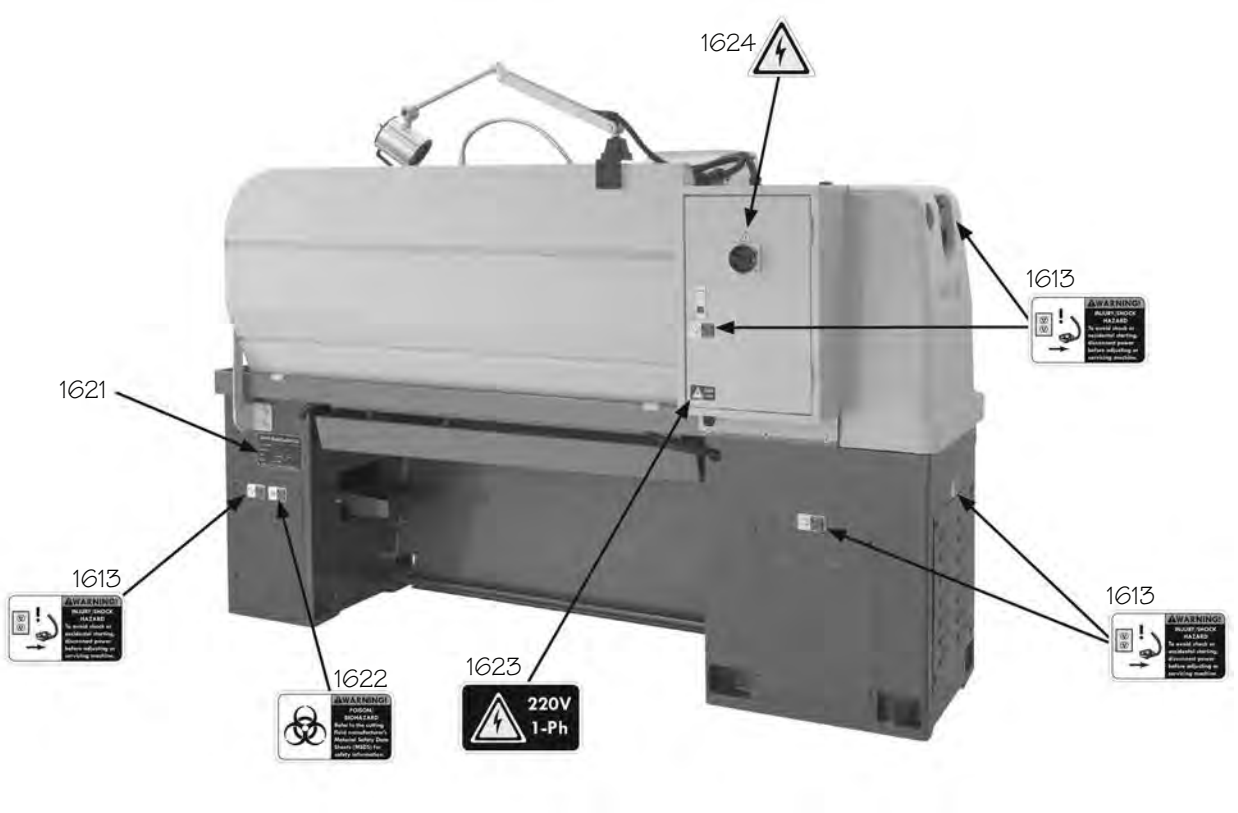

REF	PART #	DESCRIPTION
1601	PSB10491601	SPINDLE SPEED WARNING LABEL
1602	PSB10491602	ONE-SHOT OILER LABEL
1603	PSB10491603	CARRIAGE LOCK LABEL
1604	PSB10491604	SB LIGHT BLUE TOUCH-UP PAINT
1605	PSB10491605	SB DARK BLUE TOUCH-UP PAINT
1606	PSB10491606	HEAVY 13 LABEL (SB1049)
1606	PSB10491606	HEAVY 13 LABEL (SB1050)
1607	PSB10491607	DIAL INDICATOR LABEL
1608	PSB10491608	SB MODEL NUMBER LABEL (SB1049)
1608	PSB10501608	SB MODEL NUMBER LABEL (SB1050)
1609	PSB10491609	SAFETY GLASSES LABEL
1610	PSB10491610	CHUCK KEY WARING LABEL
1611	PSB10491611	SB NAMEPLATE
1612	PSB10491612	ENTANGLEMENT WARNING LABEL

REF	PART #	DESCRIPTION
1613	PSB10491613	DISCONNECT WARNING LABEL
1614	PSB10491614	FLUID CAPACITIES LABEL
1615	PSB10491615	MACHINE ID LABEL (SB1049)
1615	PSB10501615	MACHINE ID LABEL (SB1050)
1616	PSB10491616	READ MANUAL WARNING LABEL
1617	PSB10491617	TRAINED PERSONNEL LABEL
1618	PSB10491618	CHANGING SPEEDS LABEL
1619	PSB10491619	CHANGING END GEARS LABEL
1620	PSB10491620	MODEL NUMBER BRASS PLATE (SB1049)
1620	PSB10501620	MODEL NUMBER BRASS PLATE (SB1050)
1621	PSB10491621	MACHINE INFORMATION LABEL
1622	PSB10491622	BIOHAZARD WARNING LABEL
1623	PSB10491623	VOLTAGE-PHASE LABEL 220V 1PH
1624	PSB10491624	ELECTRICITY LABEL