T26867 Parts Breakdown

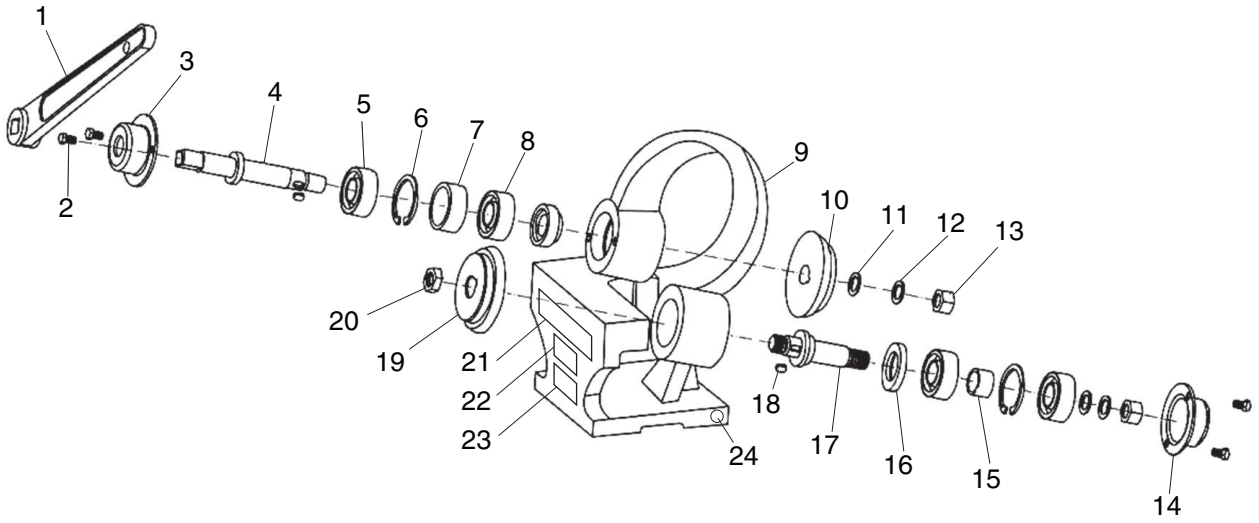

REF	PART #	DESCRIPTION
1	PT26867001	RATCHETING WRENCH
2	PT26867002	PHLP HD SCR M5-.8 X 8
3	PT26867003	UPPER DUST COVER
4	PT26867004	UPPER SHAFT
5	PT26867005	BALL BEARING 6203ZZ
6	PT26867006	EXT RETAINING RING 17MM
7	PT26867007	BUSHING
8	PT26867008	ADJUSTABLE BUSHING
9	PT26867009	SHEAR BODY
10	PT26867010	UPPER BLADE
11	PT26867011	FLAT WASHER 14MM
12	PT26867012	LOCK WASHER 14MM
13	PT26867013	HEX NUT M14-2
14	PT26867014	LOWER DUST COVER
15	PT26867015	BUSHING
16	PT26867016	SPACER
17	PT26867017	LOWER SHAFT
18	PT26867018	KEY 5 X 5 X 10
19	PT26867019	LOWER BLADE
20	PT26867020	HEX NUT M14-2 THIN
21	PT26867021	MACHINE ID LABEL
22	PT26867022	AMPUTATION HAZARD WARNING LABEL
23	PT26867023	EYE INJURY HAZARD WARNING LABEL
24	PT26867024	GRIZZLY GREEN TOUCH-UP PAINT

Please Note: *We do our best to stock replacement parts whenever possible, but we cannot guarantee that all parts shown here are available for purchase. Call* ***(800) 523-4777*** *or visit our online parts store at* ***www.grizzly.com*** *to check for availability.*